रामागुण्डम फर्टिलाइजर्स एण्ड केमिकल्स लिमिटेड

Ramagundam Fertilizers and Chemicals Limited

(A Joint venture company of NFL, EIL & FCIL)

Fertilizer City -505210 Ramagundam

Peddapalli (Dist.) ,Telangana State

BIDS ARE INVITED REGARDING

"Annual Rate Contract for Hot and Cold Insulation Jobs for a period of One year

at

RAMAGUNDAM FERTILIZERS AND CHEMICALS LIMITED

Fertilizer City, Ramagundam– 505210

Peddapalli (Distt) Telangana State

Tender Ref: RFCL/Site/Mech/2023/09/ARC_Insulation

Bidder's Initial & Seal

Ref: RFCL/Site/Mech/2023/09/ARC Insulation **Dated: 24/08/2023**

Sub: Tender for "ARC for Hot and Cold Insulation Jobs at RFCL Ramagundam for a period of One year"

INDEX/TABLE OF CONTENTS

S No.	Description	Page No.
	Cover Page	1
	Index	2
1	Notice Inviting Tender/Letter inviting Bid	3-7
2	Declaration & Performa's **(Annexure-I)**	
2.1	Declaration Form for submission of Tender Form-I	8
2.2	Declaration Form for bidders' details-II	9-10
2.3	Declaration of bank details (E-banking Mandate) Form-III	11
3	Definition of Terms **(Annexure-II)**	12
4	Eligibility and Evaluation criteria **(Annexure-III)**	13-16
5	General Terms and Conditions of Contract **(Annexure-IV)**	17-33
6	Scope of work and Special Terms & Conditions of Contract **(Annexure-V)**	34-40
7	Detail of Hot Insulation **(Annexure-VI)**	41-87
8	Detail of Cold Insulation **(Annexure-VII)**	88-116
9	Under taken regarding blacklisted **(Annexure-VIII)**	117
10	Bank Guarantee Performa **(Annexure-IX)**	118-119
11	Performa for Indemnity Bond **(Annexure-X)**	120
12	Form of Contract **(Annexure-XI)**	121-123
13	Certificate of Compliance **(Annexure-XII)**	124
14	Checklist of bidders **(Annexure-XIII)**	125
15	Undertaking on bidder letterhead **(Annexure-XIV)**	126
16	Schedule of Rates **(Annexure-XV)**	127-130

Note: The bidders shall satisfy themselves before submitting that no page or document listed above is missing from the tender issued to him/them.

Bidder's Initial & Seal

Ramagundam Fertilizers And Chemicals Limited
रामगुंडम फर्टिलाइजर्स एण्ड केमिकल्स लिमिटेड

(A Joint Venture Company)

Site Office : Fertilizers City, Ramagundam - 505 210, Dist. Peddapalli, Telangana
Telphone : +91 8728 257488, E-mail : rfcl.ramagundam@rfcl.co.in
GSTIN : 36AAHCR2335P1ZY, CIN : U24100DL2015PLC276753

Ref. No: RFCL/Site/Mech/2023/09/ARC_Insulation Date:24/08/2023

To,

M/s_____
_____
_____

Subject: Annual rate contract for Hot and Cold Insulation works at RFCL, Ramagundam for a period of one year and three months extendable

Dear Sir,
Sealed TENDERS are invited for the work as detailed below:

1.	**Name of Work**	**Tender for** "Annual rate contract for Hot and Cold Insulation works at RFCL, Ramagundam for a period of one year and three months extendable"
2.	**Earnest Money Deposit** (Tender received without EMD are likely to be rejected.)	Bidder to submit Earnest Money of Rs. **50,000.00** (Rupees Fifty Thousand Only) in the form of Crossed / A/c payee Demand Draft in favour of "Ramagundam Fertilizers and Chemicals Limited, payable at Ramagundam" or E-transfer in RFCL-site account [A/c detail mentioned in point 19.a (page 5 of this NIT]. **Note**: 1) Cheque shall not be accepted in any case. 2) Tender received without EMD are likely to be rejected. 1) This is a work contract. Hence, Bidders registered under National Small-Scale Industries/MSME/start-ups are not exempted from submission of E.M.D and tender fees as detailed in GTC Cl. No. 1.8.0 (b).
3.	**Tender Cost**	Rs.750.00 (Rupees seven hundred fifty Only) inclusive of GST in the form of Crossed / A/c payee Demand Draft in favour of "Ramagundam Fertilizers and Chemicals Limited, payable at Ramagundam **Note**: 1) Cheque shall not be accepted in any case. 2) Separate DDs / Banker's Cheque/ E-transfer (RTGS/NEFT) for both Tender fee and EMD amounts
4.	**Tender category**	Work contract

Bidder's Initial & Seal

5.	**Contract Validity**	One year from the start date mentioned in Letter of acceptance & extendable for three months if mutually agreed
6.	**Validity of the Tender**	120 days from the Date of Opening of Tender.
7.	**Last Date & Time for Receipt of Bids**	14/09/2023 up to 11:00 Hrs.
8.	**Date & Time for Opening of Bids**	14/09/2023 at 11:30 Hrs.
9.	**Place of Receipt and Opening of Bids**	Office of DGM (Mech) I/c, Ramagundam Fertilizers And Chemicals Limited, Ramagundam – 505210, Dist- Peddapally, Telangana

10. Tender Documents may be downloaded from our website www.rfcl.co.in. In case documents are downloaded directly from the said websites, requisite tender fees and EMD shall be submitted along with tender documents in envelope No 1. Parties are advised to visit RFCL website regularly. Any amendment / corrigendum to the above NIT will be displayed on aforesaid website only.
11. Tender Documents may also be obtained from the office of undersigned before due date of Tender submission on deposit of Demand Draft / Banker's Cheque /E-transfer (Rs. 750 only) in favour of RFCL payable at Ramagundam towards cost of Tender Documents (50.00 shall be charged extra for getting tender documents through Post).
12. All requests for interpretation, clarification & queries in tender shall be addressed, in writing to DGM(Mechanical) I/c at least 7 (Seven) days prior to the closing date of the tender.
13. The Tenderer may visit the site, acquaint himself fully of the job and site condition, if required, and no claim, whatsoever, will be entertained on the plea of ignorance of difficulties involved in the execution of the work.
14. The rates should be quoted item wise for the complete Scope of Work as per Performa 'Schedule of Rates'. The rates should be quoted only in the units given in the Schedule of Rates and should be indicated both in words as well as figures. The rates quoted shall be valid for 120 days from the date of opening of technical bid for the acceptance.
15. In case of any discrepancy, the rates quoted in words shall be treated as final. Any corrections made in the prices shall be authenticated with signatures at all places. The Tenderer shall have to submit the Schedule of Rates Performa duly filled in, failing which their Price bid will not be acceptable.
16. The tenderer shall quote single rate against each item and not the multiple rates in the Schedule of Rates. Any tender with the multiple rates quoted will be summarily rejected. Price should be quoted strictly as per the Performa enclosed for Schedule of Rates.
17. Ramagundam Fertilizers & Chemicals Limited reserves the right to reject any or all tenders without assigning any reason whatsoever and are not bound to accept the lowest tender. The tender can be split between two or more tenderer without assigning any reason thereof as per the requirement on case-to-case basis.
18. Incomplete Tenders or Tenders not accompanied with the required Details / Tender fee/ EMD or Tenders received late would be liable to be rejected without any further reference whatsoever.
19. **Submission of Tenders**

    The Tender shall be submitted in Three Sealed Envelopes as under:

    a. **Envelope No. 1:**

Will be super scribed "**Earnest Money**" and shall contain either of earnest money deposit of Rs.**50,000.00/- (Rupees fifty thousand only).** Bidders registered under National Small-Scale Industries/MSME Act. are not exempted from submission of E.M.D. (as detailed in GTCC Cl. No.1.8.0.) ~~instead to EMD they will submit National Small-Scale Industries/MSME certificate.~~

EMD can be deposited in RFCL's account through RTGS/NEFT & details of the transaction with UTR No. to be submitted along with technical bid for verification.
RFCL's site bank Details for RTGS/NEFT are as follows:

a)	Beneficiary Name	:	M/S RAMAGUNDAM FERTILIZERS AND CHEMICALS LIMITED.
b)	Name of bank	:	STATE BANK OF INDIA
c)	Branch	:	FERTILIZER CITY, RAMAGUNDAM (61777)
d)	Account Number	:	36727029257
e)	IFSC No.	:	SBIN0061777

b. Envelope No. 2:

Will be super scribed "**Techno-Commercial Bid (unpriced)**" containing the duly signed Tender Documents as token of acceptance of Terms and Conditions of NIT and Eligibility Criteria as mentioned in the NIT & all other supporting documents including declaration forms. Blank Price bid/Schedule of rates (SOR), without the prices/rates but mentioning **"QUOTED/NOT QUOTED"** against each item towards confirmation that the prices are quoted in the prescribed format complying with all the requirements of Price bid/SOR, shall be submitted along with the Tender documents in Envelope-2.

c. Envelope No. 3:

Will be super scribed **'Price Bid/Schedule of Rates'** and shall contain the item wise rates only as per Schedule of Rates Performa.

The three envelopes should in turn be put together in a separate envelope duly super scribed with **"Annual rate contract for Hot and Cold Insulation works at RFCL, Ramagundam for a period of one year and three months extendable.**

20. Opening of Tender :

The Tender shall be opened as under:

Envelope No. 1:

Super scribed 'Earnest Money' containing Earnest Money shall be opened first on the Scheduled Date & Time of opening of tenders in the presence of the Tenderers or their representative, who wish to be present at the time of Tender Opening.

Envelope No. 2:

Super scribed 'Technical Bid' will then be opened and discussion would be carried out with the respective Tenderers for clarifications, if any.

Envelope No. 3:

Super scribed 'Price Bid' will be opened if technical bid and EMD found in order on the same day or at a later date, which shall be intimated to the Tenderers.

21. RFCL reserves its right to open the Price bids of only such tenderers who are found to be meeting the eligibility criteria based on the documents submitted by him/them in the Technical bids.

22. Evaluation of offer shall be on overall L-1 basis.

23. All pages shall be initialled at the lower right-hand corner and signed wherever required in the tender papers by the tenderers or by a person holding power of attorney/ authorization authorizing him to sign on behalf of the tenderer before submission of tender. All corrections and alterations in the entries of tender paper will be signed in full by the tenderer with date. No eraser or overwriting is permissible.

24. No condition or deviation should be mentioned by tenderer in Price Bid. Price Bids with any condition or deviation shall liable to be rejected.

25. The prospective tenderer having any common Partner / Director / Managing Director etc. Or having any other common criteria shall be considered as sister / group / Associates Company. In such cases only one of them will be eligible for participating in the tender.

26. While submitting the offer, bidders may ensure that tender documents /offer have been signed by authorized signatory of the company. Subsequent withdrawal of offer / non-acceptance of orders placed based on the offer submitted by them will not be entertained on the ground that the offer was not signed by the authorized person.

27. One person will be allowed to represent only one company during discussion/negotiation with RFCL. If same person is representing different companies with authorization letter from more than one company, such person will be allowed to represent only the first company called for discussion/negotiation.

28. RFCL reserves the right to postpone the tender opening date and / or time and will intimate all the tenderers well in time, of such postponement along with notice of revised opening date and time.

29. In case, due to some unforeseen circumstances, the date of receiving / opening of the tender happen to be a holiday / closed day, the tender will be received / opened on the next working day.

30. More than one quotation in a single sealed envelope will not be considered. all such tenders shall be liable to be rejected.

31. The tender is non-transferable. Unsigned tenders shall be out-rightly rejected.

32. RFCL further reserves its right to accept / reject any / all tenders in whole or in part without assigning any reason thereof. Conditional tenders are liable to be rejected.

33. RFCL shall not be responsible for delay, loss or non-receipt of tender document sent by bidders.

34. In case the tender is received in open condition, then the entire risk for loss of confidentiality shall be with the party. RFCL shall not be responsible on this account whatsoever.

35. The contractor shall not appoint any sub company / agency to carry out any obligation under the contract without prior written permission from RFCL. If at any time such a discrepancy is detected, the contract shall stand terminated without any notice and the security deposit shall be forfeited.

36. The offers received after scheduled date and time of submitting the offer would be out rightly rejected.

37. RFCL will have the right to issue addendum to tender documents to clarify, amend, modify, supplement or delete any of the conditions, clauses or items stated. Addendum so issued will form part of original invitation to tender.

Bidder's Initial & Seal

38. RFCL reserves the right to verify all statements, information and documents submitted by the bidder in his tender offer, and the bidder shall, when so required by RFCL, make available all such information, evidence and documents as may be necessary for such verification.

39. These letter/instructions shall form part of the contract document and shall be signed and returned along with the tender documents.

40. Tenderer shall submit along with the tender's full particulars of their institution along with experience. The following documents are to be submitted with the Tender in the envelope No. 2, failing which the tender will be liable for rejection:
    - **I.** Duly signed and stamped tender document (NIT) including blank price bid/SOR mentioning quoted/not quoted against each item of SOR
    - **II.** Copy of Permanent Account Number (PAN) issued by Income Tax Dept.
    - **III.** Copy of GST Registration No. along with documentary proof thereof.
    - **IV.** Documentary proof for PF & ESI Registration Number
    - **V.** Supporting documents as per the Eligibility Criteria as mentioned in Annexure – III in NIT. (Work order with completion certificate, balance sheet and Financial turnover proof etc.)
    - **VI.** Power of Attorney in the name of person, if required, who has signed the Tender Documents.

41. The Tender shall be addressed to **DGM (Mechanical)I/c** , Ramagundam Fertilizers & Chemicals Ltd., Fertilizer City, Ramagundam-505210, Dist. Peddapalli (T.S)

Thanking you,

Yours faithfully,

for M/s. Ramagundam Fertilizers & Chemicals Ltd.

RAMESH THAKUR
DEPUTY GENERAL MANAGER (Mechanical) I/C
Ramagundam Fertilizers and Chemicals Limited
Ramagundam-505210, Dist. Peddapalli (T.S)

(Ramesh Thakur)

DGM (Mechanical) I/c

E-mail: rkthakur@rfcl.co.in

Mob: 8989710598

Encl.: Tender Documents & Schedule of Rates (Annexure I to XV)

Annexure-I

DECLARATION FOR SUBMISSION OF TENDER FORM-I

To,
DGM(Mech)
Ramagundam fertilizers & Chemicals Limited
Fertilizer City, Ramagundam
District: Peddapalli (Telangana)
Pin Code- 505 210

Dear Sir,
I/We hereby submit tender for **"ARC for Hot and Cold Insulation Jobs at RFCL Ramagundam for a period of One year."**at Ramagundam fertilizers & Chemicals Limited, Fertilizer City, Ramagundam-505210, Telangana, as per tender separately signed and accepted by me/us, and rates quoted by me/us in attached schedule of rates (Annexure – XV) in accordance with Notice Inviting Tender, terms and conditions of Tender, other documents and papers as detailed in the tender document.
I/We hereby agree to abide by and fulfil all terms and conditions referred to in the Tender Document /Work Order/LOA etc. and in default thereof, to forfeit and pay to the RFCL or its successors or its authorized nominees such sums of money as are stipulated in Terms and Conditions contained in the Tender Document.

I/We confirm having deposited the Earnest Money of Rs. 50,000/- (Rs. Fifty Thousand Only) vide Demand Draft No._____ dated _____in favour of Ramagundam Fertilizers and Chemicals Limited payable at Ramagundam.

It is certified that Price Bid/Schedule of Rates is unconditional and quoted for all the items of 'Schedule of Rates/Price bid' in Figures and Words both and no item is blank/unquoted.

If, I/we fail to start execution of the said contract in the time, specified in the tender documents or fail to deposit the amount of security deposit specified in the Tender Document, I/We agree that Ramagundam fertilizers & Chemicals Limited shall forfeit the said Earnest Money. The said owner shall also be at liberty to cancel the notice of acceptance of tender if I/We fail to remit Security Deposit amount as aforesaid or to execute an agreement or to start work as stipulated in the tender document/perform the contract faithfully.

Dated the _____ day of _____ 20___

Signature of Tenderer with Seal

Name & Address: _____
E-Mail Address: _____
Mobile/Telephone No._____

Bidder's Initial & Seal

FORM: II

DECLARATION FOR BIDDER DETAILS

A. The following declaration to be signed by Bidder and to be submitted along with required documents which would be duly self-certified:

Sr.	Description			
1.	Name of Applicant/Firm/Company			
2.	Complete Address along with Contact Person name, mobile number and Email Id			
3.	Company Profile			
i)	Public Limited Company / Private Limited Company/ Undivided Hindu Family/Individual/ Partnership Firm/Co-operative Society/LLP/Others (Please mention)			
	(Please attach duly attested partnership deed (latest) by Notary public/Self attested registration copy /Incorporation certificate, Articles of association and memorandum of association and power of attorney who is signing documents on behalf of applicant/firm/company).			
4.	Year of Establishment & Registration No along with documentary proof if any			
5.	If a Bidder has relations whether by blood or otherwise with any of employees (including employees on deputation) of RFCL, the Bidder must disclose the relation at the time of submission of Tender, failing which, RFCL shall reserves the right to reject the Tender or rescind the Contract.	**YES / NO (If Yes, give the following details)**		
		Name & Designation of the Employee	**Place of Posting**	**Relation with the Employee**
6.	P.F. Registration No. of the Contractor to be intimated along with Documentary proof thereof.			
7.	PAN No. of the Contractor to be intimated along with Documentary Proof thereof.			
8.	Whether bidders are registered or unregistered as per GST Laws. If registered the following details shall be provided-			
9.	GST Registration No. with Documentary Proof.			
10.	Service Accounting Code No.			
11.	Rate of GST applicable on the quoted rates	IGST _____%	CGST _____%	SGST _____%

Bidder's Initial & Seal

12.	We have assessed & ascertained the rate of GST applicable on quoted services. It is clearly understood that RFCL will not have any liability towards payment of GST over & above the GST rate quoted for any reason whatsoever except for statutory variation against documentary evidence.	**Agreed**		
13.	ESI Registration No. of the bidder to be intimated along with Documentary proof thereof.			
14.	If the bidder is registered as Micro/Small/Medium Enterprises as per MSMED Act,2006, the same may be confirmed by the bidder and submit a photocopy (Self certified) of the registration certificate in support thereof. Otherwise it will be construed that the bidder is not registered as per MSMED Act, 2006. ***Registration month & Year should be prior to bid submission due date.***	**Not Applicable (for this work contract)**		
15.	Labour license no. of the bidder to be intimated along with Documentary proof thereof. If the bidder does not have labour license, then the bidder shall submit undertaking on their letter head regarding Labour License, as per the following format " In case this job is awarded to us i.e. M/s_____, we shall obtain Labour License from the appropriate Licensing Authorities i.e. Central / State Government , as applicable from time to time , under the Contract Labour (R &A) Act, 1970 &the rules enacted thereunder and submit a copy of the same to RFCL, Ramagundam before start of execution of contract work in RFCL, Ramagundam. If we fail to submit labour license before start of execution work, we agree for forfeiture of EMD/SD and termination of Contract by RFCL"			

Dated the _____ day of _____20___

Signature of Tenderer with the seal

Name & Address: _____

Email and Phone: _____

Bidder's Initial & Seal

FORM-III

E-BANKING MANDATE FORM

PRINT ON LETTER HEAD OF CUSTOMER/VENDOR

Ref. No.: _____ Date: _____

S No.	Particulars	Detailed to filled here
1.	Vendor/Customer Name	M/s._____
2.	Vendor/Customer Code	
3.	Vendor/Customer Address	
4.	Vendor/Customer E-mail ID	
5.	**Particulars of Bank Account**	
	i) Name of Beneficiary	
	ii) Name of the Bank	
	iii) Name of the Branch	
	iv) Branch Code	
	v) Address	
	vi) Telephone No.	
	vii) Type of Account	
	viii) Account No.	
	ix) RTGS/IFSC	
	x) 9 digit MICR Code	

I/We hereby authorize Ramagundam Fertilizers & Chemicals Limited (RFCL) to release any amount due to me/us in the Bank account as mentioned above. I/We hereby declare that the declaration given above are complete & complete. If the transaction is delayed or lost because of incomplete or incorrect information, we would not held RFCL responsible for that.

SEAL & SIGNATURE of Vendor/Customer

We certify that M/s. _____ has an A/c No. _____with us & we confirm that the details given above are correct as per our record.

Bank Stamp:

Date:

Signature of authorized officer of Bank

(OR)

In case if it is not possible to get it certified/endorsed from the bank, a copy of cheque shall be attached.

Bidder's Initial & Seal

Annexure-II

DEFINITIONS OF TERMS

In the contract documents herein defined where the context so admits, the following words and expression will have the meanings assigned to them respectively:

1. "The OWNER" means the RAMAGUNDAM FERTILIZERS AND CHEMICALS LIMITED (RFCL), incorporated in India, having its corporate office at 4th Floor, Wing A, Kribhco Bhawan, Sector-1, Noida, Uttar Pradesh PIN-201301.
2. The "ENGINEER-IN-CHARGE (EIC)" shall mean the person designated as such by RFCL and shall include those who are expressly authorized by him to act for and on his behalf for operation of this contract.
3. The "WORK" shall mean the works to be executed in accordance with the contract or part thereof as the case may be and shall include all extra, additional, altered or substituted works as required for purpose of the contract.
4. "CONSTRUCTION EQUIPMENT" means all appliances and equipment of whatsoever nature for the use in or for the execution, completion operation or maintenance of the work unless intended to form part of permanent work.
5. "SITE" means the areas in which the work is to be performed by the Contractor and shall include a part or portion of the site on which the permanent work is proposed to be constructed.
6. The "TENDER DOCUMENTS" shall consist of Short Tender Notice, General Instructions to the Tender, General Terms and Conditions of Contract, Special Terms and Conditions of Contract, Specifications, Drawings, Time Schedule Tender Form, Performa or Agreement Form, Schedule of Rates, and Addendum/Addenda to Tender Documents.
7. "THE CONTRACTOR" means any person or persons or firm or company whose Tender has been accepted by RFCL with the concurrence of the Owner, and the legal personal representatives, successors and permitted assigns of such person, persons firm or company.
8. The "CONTRACT" shall mean the Agreement between RFCL and the Contractor for the execution of the works including therein all contract documents.
9. The "SPECIFICATIONS" shall mean the various Technical specifications attached and referred to in the Tender documents. It shall also include the latest addition of relevant Indian Standard Specifications published before entering into contract.
10. "The DRAWINGS" shall include Maps, Plans and Tracings OR Prints thereof with any modifications approved, in writing by the Engineer-in-charge and such other drawings as may, from time to time, be furnished or approved in writing by the Engineer-in-charge.
11. The "CONTRACT DOCUMENTS" shall consist of Agreement, Tender documents as defined in Clause 6 & 8 above, Acceptance of Tender and further amendments.
12. The "ALTERATION ORDER" means an order given in writing by the Engineer-in-charge to affect additions to or deletion from and alterations in the works.
13. The "COMPLETION CERTIFICATE" shall mean the Certificate to be issued by the Engineer-in-charge when the works have been completed to his satisfaction.
14. The "FINAL CERTIFICATE" in relation to a work means the Certificate issued by the Owner after the period of defect liability is over.
15. The "PERIOD OF DEFECT LIABILITY" in relation to work means the specified period from the date of issue of Completion Certificate up to the date of issue of Final Certificate during which the Contractor stand responsible for rectifying all defects that may appear in the works.
16. 'ZERO DATE' shall mean the date of issue of LETTER OF ACCEPTANCE (LOA) or issue of WORK ORDER, whichever is earlier.
17. "GTCC" means General Terms & Conditions of Contract.
18. Technical Terms and Conditions & Special Terms and conditions are succeeding to GTCC. Any clause under different head shall be succeeded by clause in the succeeding head.

ELIGIBILITY AND EVALUATION CRITERIA

A. Technical Eligibility criteria

The bidders shall submit documentary evidence with respect to experience of having successfully completed "Similar works" in Chemical/Petro-chemical/Fertilizer Industry/Power Plants etc. "Similar work" means Hot/ Cold Insulation jobs employing the same technology, nature of job and skill based on similar experience as defined in Scope of Work of Tender Documents and Schedule of Rates (but quantities can vary).

B. Financial criteria

S. N.	Conditions	Documents required (To be submitted along with Technical bid)
1.	Bidder should be a Contractor having successful experience of "Hot/Cold insulation work" any of one year during the last Seven (7) years. **Note**: "The last 7 years shall be counted from last date of the preceding month in which tender has been Issued."	i) Bidder must submit the copy of valid industrial License issued by Statutory authority for being a manufacturer along with ISO certificate/ GST Registration certificate / Udyam Adhaar / certificate issued by statutory authority / NSIC certificate or equivalent certificate. ii) In case the manufacturer wants to quote through their authorized dealer/distributor or their authorized dealer wants to quote separately then authorization certificate from the manufacturer is required in addition to (i) above. The Authorization certificate should be issued for specific tender/enquiry. iii) Authorization letter from the company on behalf of the person signing the document be provided with technical bid. iv) For Proprietorship firm - Name of the proprietor to be mentioned. Affidavit of proprietorship in original duly notarized(Latest) v) For partnership firms –Affidavit in originals duly notarized, confirming the current status of the firm along with names of the partners. Copy of partnership deed duly notarized (latest) to be submitted vi) For Transport unions/Co-operative societies/Registered societies- Copy of Registration certificate /Copy of Resolution of members/Authority letter to participate in the tender.
2.	Bidder should have successfully completed "Hot/Cold insulation work" any of one year during immediate last 7 years as mentioned below: One work not less than ₹27,60,880.00 + GST or Two works of not less than ₹ 17,25,550 + GST or Three works of not less than ₹ 13,80,440 + GST	Copy of Completion Certificate along with copy of Work Order from the organization where the work is executed is to be enclosed mentioning the completed value of each single work executed and performance certificate issued by the client. If the submitted workorder/completion certificate for similar work is more than one-year, Annualized value (proportionately calculated for one year) of completed work shall be considered for eligibility. **Note**: Party may be asked to submit form 26AS/16A in support to the value of work done as per work order / work completion certificate.

Bidder's Initial & Seal

3.	The Annual turnover of the bidder shall not be less than ₹ 34,51,100.00 in at least one of the preceding three financial years from the date of issuance of enquiry. **Note:** • In case financial year closing date is within 6 months of date of issue of enquiry and audited annual report of preceding financial year is not available, bidder has the option to submit the financial details of the three previous years immediately prior to the last financial year. Otherwise, it is compulsory to submit the financial details of the immediate three preceding financial years. (Example, In case ,audited annual report of immediate preceding financial year (year ending 31st March) is not available and where enquiry issue date is up to 31st December, the financial details of the three previous years immediately prior to the last financial year may be submitted. However, in case the enquiry issue date is after 31st December, it is compulsory to submit the financial details of the immediate three preceding financial years only. • In case bidder is having subsidiaries but only a single consolidated annual report is prepared as per prevailing law of land and audited which includes the financial details of their subsidiaries, consolidated audited annual report shall be considered for establishing the financial criteria subject to statutory auditor /chartered accountant of the bidder certifying that separate annual report of Bidder (without the financial data of subsidiaries) is not prepared and audited. • Further, in case a bidder is a subsidiary company and separate annual report of the Bidder is not published, but only a consolidated annual report of the parent company is available, consolidated annual report shall be considered for establishing the financial criteria subject to statutory auditor of Parent Company /Chartered accountant of the Bidder certifying that separate annual report of the Bidder is not prepared and audited.	Bidder shall submit financial standing through Audited* Balance Sheet/ Profit & Loss Account for the last three financial years. (FY 2021-22, 2020-21 and 2019-20) * Where audited accounts are not mandatory as per law, bidder can submit financial standing duly certified by practicing Chartered Accountants (not being an employee or a director or not having any interest in the bidder's company).

Bidder's Initial & Seal

4.	The net worth of the bidders should be positive for the Financial year 2021-22 (previous *year in which tender has been floated*) ending 31.03.2022. **Note**: "* date of last Financial year should be mentioned considering the period in which tender is issued". **Net worth** = Paid up share capital + Reserves out of profit (include security premium)- Accumulated losses – different expenditure – miscellaneous expenses not written off.	A Copy of Audited* Balance Sheet should be submitted in support of your claim. * Where audited accounts are not mandatory as per law, bidder can submit financial standing duly certified by practicing Chartered Accountants (not being an employee or a director or not having any interest in the bidder's company).
5.	Bidder should have minimum working capital of ₹ 3,45,110.00 as per Audited Financial result of FY 2021-22. "Working capital should be current assets minus current liabilities.	Copy of audited balance sheet for the financial year (Current Financial year in which tender has been issued) ending 31.03.2022 (end date of previous financial year) should be submitted. Or, Requisite document issued either from any Indian scheduled Bank (except co-operative bank and Gramin Bank) for availability of unutilized fund-based line of credit for at least of ₹ **3,45,110.00** as on preceding month in which tender has been issued.
6.	I.Bidder must not be **black listed** by any government department/public sector undertaking/co-operative Unit. I.Bidder must not be **delisted / on Negative List** by any government department/public sector undertaking/co-operative Unit in the last two years, as on date of participating in the tender. I.Bidder must not be on the **Holiday list** of RFCL.	Self-certification(s) for both should be submitted on Party's letterhead for the same.

C. EVALUATION CRITERIA:

Following evaluation criteria shall be followed:

a. Techno-commercial bids (unpriced bids) of only those tenderers shall be opened who have deposited the requisite Earnest Money and tender fee as prescribed in the tender document.
b. The price bid of only such tenderer shall be opened who fulfil the eligibility Criteria as defined under 'A&B' above and agree to all other terms and conditions stipulated in the NIT.

c. The work shall be awarded on overall L-1 basis after evaluation of the bids based on quoted rates by the bidders as per quantities given in the schedule of quantities. **It may be noted that, for evaluation purposes, if the tenderer does not quote rate for any item, the same shall be taken based on the highest rate quoted by any of the other tenderer. However, if such bidder happens to be lowest evaluated bidder, price of unquoted item shall be taken as Nil and considered as included in the bid price.**

d. In case quoted rates of two or more bidders happen to be same, such bidders will be called to offer discount in sealed envelope based on maximum discount offered, L-1 bidder will be decided for placement of work order.

e. The rates should be quoted in words and figures. If some discrepancies are found between the rates given in the words and figures or the amount shown in the tender. the rate as quoted in words shall be adopted and treated final.

f. Average of the executed contract value in proportion to month may be taken in the original contract period is more than one year

Annexure-IV

General Terms and Conditions of Contract

1.1.0 The execution of the work may entail working in all the site and weather condition and no extra rate will be considered on this account. The Contractor may have to carry out the jobs to work round the clock as per our requirement to be decided by Engineer in-charge and the Contractor should take this aspect into consideration for formulating his rates and quotation. No extra claim/overtime will be paid on this account.

1.2.0 Electricity, Water and Service Air will be provided free of cost at one point as per requirement of the job subject to availability.

All lifting tools & tackles are to be got tested, wherever applicable, under the Competent Person engaged by State Government from time to time and the certificates duly verified by Competent Authority are to be submitted to the Department before taking up the job.

1.3.0 **Accommodation and Land for Contractor's Godown/Workshop**:

1.3.1 Suitable accommodation will be provided for the Contractor or his authorized representative on chargeable basis, if available.

1.3.2 RFCL may allocate land for putting temporary Godown/ workshop for making storage, work site by the Contractor, free of cost.

1.3.2.1 The CONTRACTOR shall at his own cost construct temporary structures as required by them for their office, fabrication shop and construction stores only in the area allocated to them on the project site by the RFCL or his authorised representative and provide suitable water supply and sanitary arrangement and get the same approved by the ENGINEER-IN-CHARGE. No unauthorised buildings, constructions or structures should be put up by the CONTRACTOR anywhere on the project site

1.3.2.2 On completion of the works undertaken by the CONTRACTOR, he shall remove all temporary works erected by him and have the SITE cleaned as directed by ENGINEER-IN-CHARGE.

1.3.2.3 If the CONTRACTOR shall fail to comply with these requirements, the ENGINEER-IN-CHARGE may at the expenses of the CONTRACTOR remove such surplus, and rubbish materials and dispose of the same as he deems fit and get the site cleared as aforesaid; and CONTRACTOR shall forthwith pay the amount of all expenses so incurred and shall have no claim in respect of any such surplus materials disposed of as aforesaid.

1.3.2.4 RFCL reserves the right to ask the CONTRACTOR any time during the pendency of the CONTRACT to vacate the land by giving 7 days' notice on security reasons or on national interest or otherwise.

1.3.2.5 No person except for authorised watchman shall be allowed to stay in the plant area/CONTRACTOR's area after completion of the day's job without prior written permission from ENGINEER-IN-CHARGE.

1.3.2.6 **Land for Residential Accommodation**: No Land shall be made available for residential accommodation for staff and labour of CONTRACTOR

Bidder's Initial & Seal

1.4.0 The Contractor shall have to make his own arrangements for all Tools & Tackles, Skilled and Unskilled labours etc. required for the job. The work is subject to inspection at all time by the Engineers-in-charge and the Contractor shall have to carry out the work to the entire satisfaction of the Engineer-in-charge.

1.5.0 **Sub-Contracting**: Sub-Contracting of the job will not be allowed without prior written permission of the owner (RFCL).

1.6.0 Statutory deduction on account of Income Tax and GST TDS on works contract shall be made at the rates applicable at the time of release of payment to the bidder.

1.7.0 The rates quoted will be firm for the currency of the contract period and will not be subjected to escalation irrespective of any increase what so ever. The rates quoted for materials, if any, are F.O.R. RFCL Site, Ramagundam and are inclusive of all taxes. No taxes will be paid extra (excluding GST). However, the escalation pertaining to labour deployment component will be allowed as per clause 1.30.0

1.8.0 Earnest Money Deposit:

a) The Tenderer should make a deposit of Earnest Money and Tender Fees as prescribed in NIT/Tender by an A/C Payees Demand Draft (Separate for both) drawn on any Scheduled Bank except Rural or Co-Operative Bank in favour of "**Ramagundam Fertilizers and Chemicals Limited," payable at Ramagundam**. The Earnest Money and Tender Fees shall not be accepted in any other form except specified.

b) The Earnest Money and Tender Fees should accompany the Tender in separate Envelope without which tender may not be opened and it may be considered as rejected at the sole discretion of RFCL. However, Bidders firm registered, Prior to bid submission due date, with NSIC/MSE (Micro & small) vendors are exempted from submission of Tender fee and EMD subject to submission of documentary evidence that the bidder is a Micro or Small Enterprises registered with District Industries Centers or Khadi and Village Industries or National Small Industries Corporation or Directorate of Handicrafts and Handloom or any other body specified by Ministry of Micro, Small and Medium Enterprises or Udyog Aadhaar Memorandum.

c) In case tenderers are required to collect tenders from RFCL Office, the tender sets may be given upon the submission of the tender fee in prescribed mode/form as above. In case parties download the tenders from the website, tendered are required to submit the respective tender fee along with EMD.

d) Earnest Money Deposit will be refunded to all unsuccessful bidders after award of Contract/Placement of Order against the tender to Successful bidder. Earnest Money Deposit will be refunded to all Technically unsuitable bidders within 30 days after expiry of tender validity period or placement of order against tender whichever is earlier. No Interest shall be payable by RFCL for amount deposited as Earnest Money.

e) Earnest Money is liable to be forfeited if tenderer:

   i. Withdraws or modifies offer in full or part during the validity period
   ii. Failure of the bidder to honor their offer.
   iii. Does not accept Purchase / Work Order if placed by RFCL
   iv. Does not Confirm of acceptance of order within the stipulated time after placement of order.
   v. Inability to perform satisfactorily after receipt of order in case of successful bidder.
   vi. If documents submitted along with the bid are found false, fabricated etc.

1.9.0 The following tenders will be liable to summary rejection:

a) Tenders submitted by Tenderer who resort to canvassing.
b) Tenders, which do not fulfil any of the conditions, laid down in the Tender Documents or are incomplete, in any respect.
c) Tenders, which contain uncalled for remarks or any alternative additional conditions.

d) The company reserve the right to accept the lowest or any other Tender in part or in full or award parallel contracts or reject all OR any of the Tender without assigning any reasons thereof.

e) Tenders received late / delayed.

f) Bidder's bid should be workable and price bids quoting "Nil" consideration or "Negative" or "Zero or its derivatives (i.e. not less than 1.00%) as contractor's service charge/ profit margin will be rejected summarily.

g) Bids having less than current minimum wages as specified by Govt of India/Telangana State Govt. whichever is higher and not fulfilling the related statutory requirements as per applicable labour laws/other laws from time to time.

h) Tenders not accompanying the Earnest Money and Tender fee of prescribed value and prescribed mode/form.

i) Ring tendering/Cartel formation

1.10.0 If the Tenderer has relations whether by blood or otherwise with any of the employees (including employees on deputation) of the RFCL, the tenderer must disclose the relation in the Form of Declaration attached, at the time of submission of tender failing which RFCL shall reserve the right to reject the tender or rescind the Contract.

1.11.0 The Contractor shall at all times indemnify RFCL against any claim which may be made under the ESI Act 1948, regulation/ scheme or any statutory modifications thereof or otherwise for or in respect of any damage or compensation payable in consequence of any accident or injury sustained by any workman or other person whether in the employment of the Contractor or not.

1.12.0 In every case in which by virtue of provision of ESI Act 1948 or any other Law for the time being in force, RFCL is obliged to pay compensation to a Workmen employed by the Contractor for the execution of the work, RFCL will recover the amount of the compensation so paid from the Contractor's bill, Security Deposit, Bank Guarantees.

a) The Contractor will be solely responsible for any liability for his workers in respect of any accident, injury etc. arising out of and in the course of Contractor's employment. For this purpose, he shall obtain ESI Registration Number from Appropriate Authorities and deposit both Employer's as well as employees share of ESI contribution each month with ESI Authorities and also make necessary compliance of the provisions of the ESI Act, its regulations and scheme. The Contractor shall be responsible for recovery of employees share of ESI contribution from the concerned Contract Labour and RFCL will not bear any liability whatsoever on this account. Further, the Contractor also indemnifies RFCL against any damages/interest that may be imposed by ESI Authorities on account of non-payment/delayed payments towards ESI.

b) The Contractor shall ensure that contribution on account of ESI is deposited by due date of month and he will be required to furnish photocopy of ESI challan every month by 21st of the month following the month to which it relates. For this purpose, every month the Contractor shall submit to RFCL a copy of wages sheet as a proof of wages paid to the staff, treasury challan regarding depositing of ESI amount etc. for perusal of officer in charge and will also submit quarterly/periodically statements of ESI etc. as required under various labour laws in respect of staff engaged in execution of jobs. He will also submit half yearly return of ESI.

c) **Insurance Cover for Workmen:**

All workers whose salary is more than Rs 21,000/- per month need not to be covered by ESI. However, contractor to take insurance policy to cover the risk towards temporary disablement and permanent disablement for the workmen.

The contractor shall obtain adequate Insurance Policy in respect of his workmen to be engaged for the work compulsorily towards compensations as admissible under the Workmen's Compensation Act

1923, and Rules framed there under upon death/disablement of a worker. Photocopy of this Insurance policy is required to be submitted by the Contractor to RFCL immediately after the issue of LOA but before the start of the work. Payment against the work done will not be released to the Contractor until and unless photocopy of the Insurance policy is submitted to the RFCL.

CONTRACTOR shall at his cost and expense take out insurance policy from a suitable insurance company acceptable to owner and maintain for the entire period until ACCEPTANCE OF WORKS or until such time thereafter as the CONTRACTOR may consider appropriate the following insurances.

i. **Workmen's Compensation Insurance (WCI):** This insurance shall confirm to and satisfy all the requirements of the applicable laws and regulations of the country, state territory or province having jurisdiction over the CONTRACTOR 's employees engaged in the WORKS.

ii. **Employer's Liability Insurance (ELI):** The insurance shall cover the liability of the CONTRACTOR as employer, for compensation beyond the coverage of the Workmen's Compensation Insurance for bodily injury to or loss of life the CONTRACTOR's employees while engaged in the WORKS.

iii. **Third Party Liability Insurance (TPL):** This insurance shall cover legal liability for bodily injury to loss of life of and/or damage to and loss of properties of the third person party arising out of the performance by the CONTRACTOR of the works.

iv. **Automobile Liability Insurance (ALI):** This insurance shall cover all the CONTRACTOR's liabilities in connection with use by the CONTRACTOR for the WORKS of any mobile equipment and automobile and when used which are owned, non-owned hired and otherwise placed under the CONTRACTOR's administration and control, or bodily injury to loss of life of and/or property damage of any person or party.

v. **Other Insurance:** Other insurance which shall be necessary or which the CONTRACTOR deems necessary for proper performance of the WORKS

Inclusion of such insurance requirements in such contracts as aforementioned however, shall not release the CONTRACTOR from any of his responsibilities and liabilities under the CONTRACT.

1.13.0 Wages shall be paid by the Contractor to the workman directly into their bank accounts through Electronic Fund Transfer without the intervention of any Jamadars or Thekedars and contractor shall ensure that no amount by way of commission or otherwise is deducted or recovered by Jamadars from the wages of workman.

1.14.0 The Contractor may employ such employees/ labours as he may think fit and the employees so employed shall be employees of Contractor for all purposes whatsoever and shall not be deemed to be in the employment of RFCL for any purpose whatsoever. The Contractor shall abide by all rules, laws and regulations that may be in force from time to time regarding the employment or conditions of service of the employees. If under any circumstances whatsoever, RFCL is held responsible in any manner whatsoever for the default or omission on the part of the Contractor in abiding by the aforesaid rules, regulations and laws or held liable or responsible to the employees of the Contractor in respect of any matter whatsoever and called upon to make payments on that account, RFCL shall be reimbursed by the Contractor for the same as also any other expenses costs and charges incurred by RFCL in any proceeding or litigation arising out of any claim, demand or act on the part of the employees of the Contractor,RFCL shall be entitled to claim, demand or compensation from the Contractor in that event. RFCL shall also be entitled to recover the aforesaid amount from the Contractor from any amounts that may become due and payable to Contractor.

1.15.0 In case of any difference of any of the terms and conditions either in the meaning or understanding or contradictory terms or conditions at different places/portions in this document, the stricter terms favoring RFCL will apply. Interested tenderer after studying the tender documents carefully, may

obtain necessary clarifications, if any in writing before tendering, submitting of tender implies that the Tenderer has obtained all the clarifications required. No claim on ground for want of knowledge in any respect will be entertained. No claim for extra charge consequent upon any misunderstanding or otherwise will be allowed.

1.16.0 The Contractor shall be liable to RFCL for any omission or commission on his part or on the part of his employees thereby causing any loss, damage or inconvenience to RFCL.

1.17.0 The Contractor shall make his own arrangement for removal of old as well as unused material, including packing materials and empty cases free of cost from work site to the place indicated by the Engineer-in-charge after completion of work and nothing extra will be paid.

1.18.0 The decision of Engineer-in-charge in regard to all matters relating to the Tender and for determine the category of work with reference to material of an item not mentioned in scope of work shall be final.

1.19.0 If the Contractor gives an undertaking (along with Technical bid) citing that the PF Code will be obtained before start of work and failure to do so, then RFCL shall have the right to terminate the Contract without any compensation or payment.

1.20.0 Quantum of Job:

The estimated quantity and value of work has been given on the basis of technical assessment and indicates the approximate quantities. The Contractor shall have to execute any or all the jobs depending upon the requirement of the RFCL. However, RFCL will not give any guarantee for minimum billing or minimum quantum of work to be executed against the contract. The rates shall remain firm for the increased or decreased quantities. Payment shall be made on the basis of actual quantities executed.

1.21.0 Rights of Owner (RFCL): If the Contractor is unable to execute the work and any loss is incurred by the Contractor in this respect, it will be to the Contractor's account. The Company may also terminate the contract after giving 15 (Fifteen) days' notice, if in its opinion, the work under the contract is not being done to its satisfaction.

A unilateral stoppage of work by the Contractor shall be considered a breach of the CONTRACT and the OWNER reserves its right to take necessary and suitable action as it may deem fit, to adequately protect his/its interest at the risk and cost of the contractor. Any aforesaid action shall be without prejudice to any other action rights and remedies etc. that may also be available

In the above events, RFCL shall have right to get the job done by any other agency/ own resources at the risk and cost of the Contractor till the expiry of period of the contract and recover the cost plus 25% to the Contractor.

1.22.0 Validity and Extension of Contract:

a. **Validity of Contract:** The contract shall remain valid for a period as specified in NIT reckoned from the date of its award. The job can, therefore, be got done any time during the tenure of the contract. In such case, normally, a notice of 7 days would be given for starting the job but the Contractor should be able to mobilize within 24 hours, if the necessity so arises.

b. **Extension of Contract:** The extension of contract can be given on the same rates, terms & conditions for a period of three months as per mutual consent. Further extension may be given only in exceptional circumstances based on justification and merit of the case.

1.23.0 FORCE MAJEURE:

The terms and conditions agreed upon under the contract shall be subject to Force Majeure. Neither the Contractor nor RFCL shall be considered in default in the performance of their obligation contained therein, if such performance is prevented or delayed or restricted or interfered with by reason of War, Hostilities, Revolutions, Civil Commotion, Strike, Epidemics, Accidents, Fires Flood, Earthquake, regulation or ordinance or requirement of any Government or any sub-division thereof, or authority or representative of any such Govt. and/or due to technical snag/reasons or any other Act whatsoever, whether similar or dissimilar to those enumerated beyond the reasonable control of the parties/bidders hereto or because of any act of GOD. The party so affected, upon giving prompt notice to the other party shall be excused from such performance to the extent of such prevention, delay, restriction or interference for the period it persists provided that the party so affected shall use its best efforts to avoid or remove such causes of non-performance if possible and shall continue performance hereunder with the utmost diligence whenever such causes are removed. Should one or both parties be prevented from fulfilling their contractual obligations by a state of Force Majeure lasting continuously for a period of one week, the two parties to the contract shall meet and decide about the future course of action for implementation of the contract.

1.24.0 Deleted.

1.25.0 RFCL shall have power to make any alteration in, omission from, addition to, or substitutions for original Specifications and instructions which may be considered necessary, during the progress of work and Contractor shall have to carry out the work in accordance with any instruction which may be given to him in writing duly signed by Engineer-in-charge. Such alteration, omission, additions, substitutions, shall not invalidate the contract and any altered, additional or substituted work which the Contractor may be directed to do in the manner above specified as a part of the work, shall be carried out by the Contractor on the same condition in all respects on which he has agreed to do the main work.

1.26.0 If the rate for the additional altered or substituted work are specified in the contract for the work, the Contractor is bound to carry out the additional, altered or substituted work at the same rate as per specifications in the rate contract for that work.

a) In the event the extra or substituted items of the work does not fall in category as above, the cost will be calculated on the basis of actual labour and consumable materials utilized for the job. The quoted rates will be inclusive of overhead and profit. The quantum of labour and consumable material used will be assessed by the Engineer-in-charge, whose decision in this respect will be final and binding upon the Contractor. The Contractor will be required to obtain prior approval of RFCL for rates payable to him for such extra items.

b) In case, the Contractor fails to do the extra and/or substituted work. RFCL will have the option to get the work done through another agency at the Contractors' risk and cost as per clause no. 1.21.0 of General Terms and Conditions.

1.27.0 Security Deposit:

a. The Security Deposit together with EMD/Initial Security Deposit shall be 10% of the contract value.
b. In case of work awarded, Initial Security Deposit (ISD) shall be 2.5 % of the Contract Value which is required to be deposited within 10 days of the issue of the letter of acceptance by the successful tenderer. EMD can be adjusted against Initial Security Deposit. The balance amount of Security Deposit (S.D.) @ 7.5% of the bill value shall be deducted from each Running Bill of the Contractor so as to make the total recovery of Security Deposit @ 10% of the Contract / Work Order Value.
c. Alternatively, Successful bidder can furnish Performance Bank Guarantee (PBG)/ Bank Guarantee (BG), in lieu of ISD & SD, from any Nationalized / Scheduled Bank except Rural and Co-operative bank

equivalent to the 10% of the contract value valid up to the expiry of Defect Liability period + three months claim period within 10 days of the issue of the letter of acceptance (As per proforma attached at **Annexure IX).**

d. In case work is split between two or more parties, SD shall be submitted based on the value of split order.

e. No interest shall be paid on security deposit. EMD shall be considered as part of SD.

f. RFCL is entitled without being bound to do so, to adjust the whole or any portion of the security deposit towards the recovery of any amount due to RFCL from the successful tenderer/Contractor.

g. Security deposit or such portion thereof that has not been adjusted towards recovery of amount due from the successful tenderer/Contractor shall be returned to contractor after obtaining 'No objection certification' from executive department after expiry of 'Defect Liability Period' on demand within 30 days.

h. If the Contractor submits security deposit in the form of Bank Guarantee (BG) as above, EMD shall be refunded along with first RA Bill payment.

i. Security deposit shall be forfeited in case the vendor fails to execute the order.

1.28.0 Period of liability (Defect Liability Period) :

The Contractor shall guarantee for the work done for a period of 3 months from the date of issue of Completion Certificate. Any damage or defect may arise or lie undiscovered at the time of completion certificate, in the workmanship shall be rectified or replaced by the Contractor to the satisfaction of RFCL. In default, the Engineer-in-charge may cause the same to be made good by other Contractor and deduct expenses (of which the certificate of Engineer-in-charge shall be final) from any sums that may be there or at any time thereafter become due to the Contractor from his Security Deposit.

1.29.0 PROCEDURE FOR MEASUREMENT/BILLING OF WORKS IN PROGRESS:

a. Measurement and Billing:

All measurement shall be in Metric System. All the works shall be measured jointly by Representatives of Engineer In charge and. Contractor. Contractor shall prepare measurements on prescribed proforma and get it verified from Sectional Heads and Area In charges of the Executive Department at RFCL before raising the bill.

The Contractor will submit a bill in approved proforma in triplicate to the Engineer In-Charge of the work giving abstract and detailed measurements for the various items executed during a month before expiry of the 1st week of the succeeding month along with the copy of the following documents and all other documents to comply with the statutory requirement.

i. Self-attested copy of the challan and ECR with respect to PF deposit relating to previous month.
ii. Self-attested copy of ESI challan relating to previous month and its payment receipt.
iii. Self-attested copy of the wage sheet
iv. Self-attested copy of the proof for transfer of salary to the workers bank account through online transfer (EFT only).
v. Self-attested copy of GST Deposit relating to previous month
vi. Any other document if required as per NIT.

b. Running Account Payments:

All running account payments shall be considered as advance payment against the final bill payment and not as payments for work actually done.

c. **Completion Certificate/Final Bill:**

The Engineer In-charge shall normally issue to the Contractor the completion certificate within one month after receiving an application thereof from the Contractor after verifying from the completion documents and satisfying himself that the work has been completed in all respects in accordance with the instructions, specifications of contract documents. The Contractor after obtaining the completion certificate is eligible to present the final bill for the work executed by him. The final bill shall be prepared in the prescribed proforma with reference to the total work covered by the contract. Such bill to be drawn up applying the applicable rates specified in the schedule of rates to the relative measured quantities. The final bill shall also include all additional claims of the Contractor and considered as conclusive.

The final bill, complete in all respects, shall be submitted by the Contractor within 30 days of the completion of work. No further claim shall be allowed by RFCL after Final bill. The following documents shall be submitted to comply with statutory requirements apart from the documents to be submitted with the RA bills:

i. Undertaking against the compliance of the labour laws in the prescribed format

ii. No claim certificate in the format approved by RFCL

iii. Copy of the Form 19 (or) Form 13 of employees send to PF office if required.

iv. Material reconciliation statement for all materials issued by RFCL to the contractor whether on free-issue basis or chargeable basis if any.

v. No dues certification for facilities provided by RFCL to the contractor.

vi. Certificate of clearing of temporary establishments of the contractor at site.

vii. Indemnity certificate towards all Labour payments and statutory payments, indemnifying RFCL/Consultant in this regard.

In case final bill is not submitted within 30 days, as specified above, the Engineer-in-Charge shall be at liberty to carry out their own measurement/recording of work done and may make payment or recover balances based on such measurement/recording which shall be binding on the contractor.

d. **Final Certificate:**

Within 15 days of Contractors application made after the expiry of the period of defect liability provided in clause 1.28.0 here of satisfaction of all liabilities of the Contractor in respect there of the Engineer In-charge that the Contractor has performed the obligations in respect of the defect liability period and until issue of such final certificate, the contractor shall be deemed not to have performed such liabilities, notwithstanding issue of completion certificate or payment of the final bill by RFCL.

1.30.0 Terms of Payment:

a. Payment of monthly running account bill complete in all respect shall be made after making necessary recoveries as per contract within 30 days of receipt of bill. Payment of final bill shall be released within 60 days after receipt of bill completed in all respect. Payment of 10 % security deposit/deducted shall be released after completion of defect liability period on demand within 30 days.

b. All payments shall be made to Contractor through Electronic Funds Transfer (NEFT/RTGS Process) as per information furnished by the Contractor in prescribed e-banking mandate form. Any change in the particulars shall be immediately informed to RFCL.

c. Escalation in Rates:

i. The escalation/de-escalation in wages, if any, will be reimbursed for the component for the statutory part of the payment like, minimum wages (Basic+VDA), PF, ESI, Bonus, Leave Payment etc., however no escalation/de-escalation will be paid on the contract profit margin.

ii. Escalation/de-escalation is applicable only in the case of Complete/Pure Man power supply contracts. For all other contracts, prices/rates quoted shall remain firm and fixed till the completion of work/Final certificate as per tender and shall not be subject to escalation. However, if any Contract labour component identifiable in the Contract, RFCL may pay the differential Minimum wages only to the extent of labour component if claimed by the Contractor, in case Minimum Wages are increased subject to submission of supporting documentary evidence.

iii. The escalation/de-escalation in wages, if any will be reimbursed as per following:

Formula= Billed amount *Wt.avg. factor*(% of labour component)

Note: Billed amount is an amount excluding GST and Contractors Profit Margin

For example- Calculation of increase in Minimum Wages Impact as given below:

S.No.	Category	Old Rate (Rs./day)	New rate (Rs./day)	Difference (Rs./day)	Proportion factor (Rs.)	Manpower deployed (No's)	Wt.avg difference (Rs./day)
1	A	B	C	D=C-B	E=D/B	F	G=E*F
2	Skilled	*522	*527	5	0.0096	5	0.0479
3	Semi-skilled	*433	*437	4	0.0092	2	0.0185
4	Un-skilled	*370	*373	3	0.0081	11	0.0892
5				Total	0.0269	18	0.1556
	Wt.avg factor (G5/F5)						0.0086

* The above figures mentioned at **B & C** are indicative and actual figures may change depending upon the minimum wage notifications from GOI/ Telangana State Govt. whichever is higher (Minimum of wages of either Telangana state govt. or GOI whichever is higher shall be considered at the time of Price bid opening or as referred in the NIT and the same shall be continued till the currency of the Contract)

d. Tax Liability:

i. The rates to be quoted by the bidder should be inclusive of all duties, taxes, levies, entry tax etc. but excluding GST. The GST will be reimbursed to the contractor against Tax invoice subject to submission of documentary evidence.

ii. No variation on account of taxes and duties, statutory or otherwise, shall be payable by RFCL to Contractor/Vendor except for GST. However, any statutory variation for GST shall be payable up to date of completion against documentary evidence except for period for which is completion is delayed due to delay by Contractor. Any reduction/deletion in Taxes / duties / cess / levies / fees shall be passed on to RFCL

iii. Addition of new taxes imposed by the State Governments/Central Government after submission of tender documents and during contractual period shall be to RFCL's account.

iv. Statutory deductions on account of any law for time being in force shall be made at the rates applicable at the time of release of payment to the bidder.

e. Raising of Invoice/Bill:

Contractor shall issue the tax invoice in accordance with GST Law within stipulated time i.e. 30 days of rendering the service.

If Contractor is a registered taxable person, a tax invoice is issued based on the rules regarding details required in a tax invoice, following are the mandatory fields in an invoice.

i. Invoice number and date
ii. Customer name
iii. Shipping and billing address
iv. Customer and tax payer GSTIN
v. Place of supply
vi. HSN code/ Accounting code of services
vii. Taxable value and discounts
viii. Rate and amount of Taxes i.e. CGST/SGST/IGST
ix. Item details i.e. description, unit price, quantity

In the event that the Contractor fails to provide the invoice in the form and manner prescribed under GST act, RFCL shall not be liable to make any payment against such invoices.

f. Debit notes and credit notes:

All revisions, rectifications, modification, settlement of taxable value or tax charged may have to be carried out through debit notes and credit notes as early as possible. Further, Credit note shall be issued not later than September month following the end of the financial year in which supply was made or date of filing of the relevant annual return, whichever is earlier. If Contractor fails to issue debit/ credit note as the case may be RFCL may withhold the payment till rectification of such differences.

g. Uploading of Taxable Invoices:

Uploading of taxable invoice and credit/ debit notes shall be done by the Contractor strictly within the period prescribed in GST act. In the event that the input tax credit of GST charged by Contractor is denied by the tax authorities to RFCL for the reason whatsoever, then RFCL shall be entitled to recover such amount from the Contractor by way of adjustment from the next invoice / security deposit. RFCL shall also be entitled to recover interest and penalty, in case it is imposed by the tax authorities on RFCL.

h. Income Tax Permanent Account Number (I-Tax PAN): The Tenderer shall mention the Permanent Account Number allotted by the Income Tax Authorities in his Tender.

1.31.0 Preservation of Free Issue Material:

All materials issued to the Contractor by RFCL shall be preserved against deterioration and storage while under Contractor's custody. Any damage / losses suffered on account of non-compliance with the requirement stipulated herein shall be considered as losses suffered due to willful negligence on the part of the Contractor and he shall be liable to compensate RFCL for the losses suffered at penal rates to be determined by the Engineer In-Charge with reference to the rates charged for the purpose of recovery and shall be final and binding on the Contractor.

1.32.0 Scrap Allowance (For Free Issue Material only):

Contractor will plan the work in such a way that the wastage to be minimum Following scrap allowance will be allowed. Beyond the allowance, the wastage will be chargeable to the contractor on RFCL rate +25% + All Taxes will be charged extra.:

S No	PARTICULARS	SALVAGEABLE
A	STRUCTURE	2.5 %
B	PIPE	3.0 %

1.33.0 Issue of material from RFCL:

Any issue of materials from RFCL stores not covered in RFCL obligation will be issued and charged on RFCL issue rate +25% + All Taxes will be charged extra. The issue of such material will be sole discretion of RFCL.

1.34.0 Issue of Gas Cylinder:

Contractor has to make his arrangement for Oxygen and Acetylene Gas. However, the Oxygen and Acetylene gas can be issued on chargeable basis in exigencies subject to the availability constituting following components.

a) Invoice price of gas.

b) Rent for each Cylinder per day.

c) Department charges.

d) Cost of collection and return of empty Cylinder.

1.35.0 Material Transportation:

The Contractor shall make his own arrangement for Transportation of the material from stores to site of work and to the place of erection etc. at his own cost for making temporary stores/work sites, RFCL may indicate an area at its own discretion for putting up of a temporary hut/shed.

1.36.0 Price Reduction Schedule:

It shall be obligation on the Contractor to adhere strictly to the time schedule as stipulated in Letter of Acceptance/Work order. In the event of work is not completed according to the time schedule, then, unless such failure is due to Force Majeure as defined in Clause 1.23.0 here above or due to RFCL's defaults , then the total contract price shall be reduced by 1 % (One Percent) of the total value of work for every day of delay or part thereof, subject to a ceiling of 10 % of the total value of work, by way of reduction in price for delay and not as penalty. The invoice raised shall take into account the above price reduction, if applicable and payment shall be released for reduced value only. If the Contractor does not raise invoice for reduced value, then the Contractor shall issue a credit note equivalent to the price reduction amount." The decision of Engineer-in-Charge with regard to applicability of Price Reduction Schedule shall be final and binding on the Contractor.

1.37.0 Engineer-In-Charge:

The Engineer-In-Charge shall have general supervision and direction of the work. He has authority to stop the work whenever such a stoppage may be necessary to ensure the proper execution of the contract. He shall also have authority to reject all work, direct the application of forces to any portion of the work as, in his judgment, is required and order force increased or diminished and to decide disputes which arise in the execution of the work. The Officer-In-Charge reserves the right to suspend the work or the part thereof at any

time and no claim whatsoever on this account will be entertained. In case of any dispute the Contractor may appeal to the Officer-In-Charge whose decision shall be final and binding.

1.38.0 Jurisdiction:

For any disputes regarding this contract, the exclusive Jurisdiction shall lie in courts situated at Peddapalli (Telangana state) generally where the contract is being executed, and jurisdiction of all other courts is explicitly excluded. This Contract shall be interpreted and governed as per the laws of India/Telangana state.

1.39.0 Conciliation & Arbitration:

Except where otherwise provided in the contract all matters, question, disputes or difference (Dispute/s) whatsoever, which shall at any time arise between/among the parties hereto, touching the construction, meaning, operation or effect of the contract, or out of the matters relating to the contract or breach thereof, or the respective rights or liabilities of the parties, whether during or after completion of works or whether before or after termination shall after written notice by either party to the contract shall be resolved/settled amicably through negotiation by the parties. For the same, one party shall issue dispute notice in this regard, to the other party. If the said dispute/s could not be settled amicably within 45 days from the date of receipt of dispute notice by other party, then party/ies may refer the said disputes/s for adjudication through Arbitration, as prescribed hereinafter.

On failure of amicable resolution/settlement as above, the dispute/s shall be referred/adjudicated through Arbitration under/in accordance with "Arbitration Centre (Domestic and International), High Court of Judicature at Hyderabad for the state of Telangana and State of Andhra Pradesh Rules,2015" as amended or modified or re-enacted from time to time. Where the said rules are silent or in conflicts with Indian Laws, same shall be governed by Arbitration & Conciliation Act 1996, as amended or modified or re-enacted, from time to time

The number of Arbitrator shall be three (3) in case of matter involving total amount of claims (without considering claim of interest) more than Rs.3 Crore, otherwise number of Arbitrator shall be one (1) i.e (Sole) Arbitrator. The language of Arbitration shall be English. The Governing Law shall be Laws of India and dispute/s shall be adjudicated as per Indian Laws.

For the convenience of parties, the venue of Arbitration shall be as per above rules i.e Arbitration Centre, Hyderabad. However, The Seat of the Arbitration shall be Ramagundam, Peddapalli District, State of Telangana. The courts at Ramagundam Peddapalli District, State of Telangana shall have exclusive Jurisdiction.

It is also agreed by and between the parties that incase a reference is made to the Sole Arbitrator/Arbitral Tribunal for the purpose of resolving the dispute/s arising out of the contract by and between the parties hereto, the Arbitrator or the Arbitral Tribunal shall not award interest on the awarded amount more than the SBI MCLR Rate applicable to RFCL on the date of award of contract".

1.40.0 Contractor to Remove Unsuitable Employees:

The Contractor shall, on instruction of the Engineer-In-Charge, immediately remove from the work any person employed thereon who misbehaves or causes any nuisance or otherwise in the opinion of the Engineer-In-Charge is not a fit person to be retained on the work and such person shall not be again employed or allowed on the works without the prior written permission of the Engineer -In-Charge.

1.41.0 Safety Regulations:

The Contractor shall observe and abide by all fire and Safety regulations of the RFCL. Before starting maintenance work, the Contractor shall consult RFCL's Safety Officer or the Engineer-in-charge. If the Safety Engineer is not available, he will do familiarize him with such regulations, copies of which will be furnished to him by RFCL, when requested. He shall be responsible for and must make good to the satisfaction of the RFCL any loss or damage due to fire to any portion of the work to be done under this agreement or to any of the

RFCL's existing property. All the accidents to Contractor's staff will be reported to the Safety Officer promptly. This will, however, not relieve the Contractor of any other statutory obligations.

The Contractor shall not undertake any hot job without safety work permit. He has to maintain First Aid Box in his office. Also, necessary safety equipment like Helmets, Hand Gloves, Face Shield, Safety Belt etc. are to be provided to his workmen by the contractor. However, special Safety equipment required as per the job requirement will be provided by RFCL free of cost.

For any default / accident / loss due to negligence of Contractor/ workers, the liability of Contractor shall be "Absolute liability".

However, Personal Protective Equipment's shall be provided to the Contractor's workmen by RFCL, on chargeable and permanent (non- returnable) basis. The cost of the item plus 25 % overhead charges shall be recovered from the Contractor.

1.42.0 Contractor to Execute Agreement: The Contractor's responsibility under this Contract will commence from the date of issue of the LOA / DLOA. The Tender Documents, Other Documents exchanged between the Tenderer and RFCL, the Letter of Acceptance, DLOA and Work Order shall constitute the Contract. The successful Tenderer shall have to execute an Agreement with Ramagundam Fertilizers and Chemicals Limited, on a non-judicial stamp paper as notified by Telangana state (Presently Rs.200.00) purchased from Ramagundam/State of Telangana, within 10 (Ten) days of date of issue of LOA/DLOA OR Start of Work whichever is earlier. The cost of stamp paper shall be borne by the Contractor.

The agreement shall remain valid for the initial period of WO and all extensions. No separate agreement for extension period shall be required.

The Agreement to be executed shall be in the Proforma which is specified by RFCL in NIT **(Annexure-XI).**

1.43.0 Bidder to Acquaint Himself Fully:

The Bidder may visit the site and shall acquaint himself fully and thoroughly with the conditions and limitations including scope, requirements and official/statutory regulations, under which, conforming to which and subject to which, services/work are to be performed by him. Failure to comply with the aforesaid requirements will not relieve the BIDDER of his obligations in the event of his tender being accepted nor any claim whatsoever will be entertained on the plea of ignorance or overlooking.

The Bidder shall give an undertaking that the terms and conditions of NIT and other aforesaid conditions are acceptable to him without reservations and no deviations to NIT have been taken while making the offer.

Unless otherwise specifically stated in his bid, it will be assumed that all terms and conditions of NIT are accepted by the bidder without any reservations whatsoever.

1.44.0 Payment for Preparation of Bid Document:

The Bidder shall not be entitled to claim any cost, charges, expenses, losses incidental to the preparation and submission of this tender in any case.

1.45.0 Termination of Contract and its Consequences:

1.45.1 Termination of Contract

Notwithstanding anything elsewhere herein provided and in addition to any other right or remedy of RFCL under the Contract or otherwise including right of RFCL for compensation for delay, the Engineer-in-charge/officer-in-charge may, without prejudice to his right against Contractor in respect of any delay, bad workmanship or otherwise or to any claims for damage in respect of any breaches of the Contract and without prejudice to any

rights or remedies under any of the provisions of this Contract or otherwise and whether the date for completion has or has not elapsed by intimation in writing, absolutely, determine the Contract:

Default or failure by Contractor of any of his obligations under the Contract including but not limited to the following, the Contract is liable to be terminated if the Contractor

a. Becomes bankrupt or insolvent or goes into liquidation or is ordered to be wound up or has a receiver appointed on its assets or execution or distress is levied upon all or substantially all of its assets or any insolvency proceedings have been initiated under Insolvency Bankruptcy Code, 2016, Or

b. Abandons the work, Or Persistently disregards the instructions of the RFCL/ Engineer in Charge in contravention of any provision of the CONTRACT, Or

c. persistently fails to adhere to the agreed program of work

Or

d. Sublets the work in whole or in part thereof without RFCL's consent in writing assigns, transfers or sublets or attempts to do so., Or

e. Performance is not satisfactory or work is abnormally delayed, Or

f. Defaults in the performance of any material undertaking under this CONTRACT and fails to correct such default to the reasonable satisfaction of RFCL within fifteen days after written notice of such default is provided to the Contractor.

g. Failure to pay minimum wages to the employees/workmen of the Contractor and related statutory payments to the concerned authorities for consecutive period of Three months, or

h. In the event of theft/untoward incident happened due to act of Contractor and/or its employees, or

i. Ring tender/Cartel formation/Non-bonafide method, or

j. RFCL may terminate the Contract due to any reason including reasons due to force majeure, regulations or ordinance of any Government or any other reasons beyond the reasonable control of the RFCL.

k. Failure to submit the PF code before start of Work and labour license, if applicable, along with first RA bill.

Such termination will be by 15 (fifteen) days' notice in writing and no claim/compensation shall be payable by the RFCL as a result of such termination (except clause 1.45.1 (k)), excepting the fees and costs for the meaningful services rendered by the Contractor and acceptable to RFCL, up to the date of termination. In case of termination of this contract on its expiry or otherwise, the staff deployed by the Contractor will have no claim for any employment in the regular / or any other capacity in RFCL.

1.45.2 Consequences of Termination:

If the contract is terminated by RFCL for the reason detailed under clause above or for any other reason whatsoever:

a. RFCL reserves the right to get the work completed at the risk and cost of the Contractor and to recover from the Contractor any amount (plus 25%) by which the cost of completing the work by any other agency exceeds the value of the contract, without prejudice to any other remedies/rights/claims etc. that may be available with RFCL.

b. Security Deposit/Performance Bank Guarantee Bond submitted by the Contractor shall stand forfeited.

c. The Contractor shall have no right to claim any compensation for any loss sustained by him by reason of his having entered into any commitment or made any advances on account of or with a view to the execution of the works, or on account of expected profits.

d. All the dues payable to the Contractor for the work executed by him before and up to termination shall only be released after making adjustments for the expenses, charges, damages and expected losses etc. incurred by RFCL as a consequence of the termination of the contract.

1.46.0 Deleted

1.47.0 TIME EXTENSION:

If the Contractor requires any extension of time for completing the Work under the CONTRACT, he must apply to RFCL within seven days from the date of the occurrence of the event on account of which he desires such extensions and RFCL may, if he thinks such request reasonable, grant such extension of time as he may think necessary.

1.48.0 Continued Performance: The Contractor shall not stop work in case of any dispute pending before arbitrator/court/Tribunal in relation to the contract or otherwise unless further progress of works has been rendered impossible due to non-fulfilment of any reciprocal promise. Unilateral stoppage of work by the Contractor shall be considered a breach of CONTRACT and the RFCL shall be within its rights to take suitable and necessary action as it may deem fit to adequately protect its own interests.

1.49.0 The Contractor shall comply with the provisions of Factories Act, 1948 & Contract Labour (Regulation & Abolition) Act 1970 and rules framed there under & amended from time to time.

1.50.0 The Contractor shall abide by all the Acts / Labour Laws related to PF, Wages, Holidays, Leaves, Bonus and Overtime etc. The Contractor is required to comply with all statutory provisions, from time to time, during the tenure of the contract.

1.51.0 The Contractor shall ensure that the payment of the minimum wages to the labourers through EFT, specified by the government (State Government or Central Govt.whichever is higher) from time to time, has been made in accordance with the Minimum Wages Act. If at any time, it is noticed or it comes to the knowledge that the payment, to the laborer's employed by the Contractor, is not made in accordance with the Minimum Wages Act, RFCL shall reserve the right to take remedial action to regulate the payments.

In case contractor fails to provide the requisite documents pertaining to statutory payments of contract workers along with the bill, an amount equivalent to 40% of the billed amount pertaining to labour wages may be withheld to take care of fulfilment of statutory requirements such as PF, ESI, Bonus, leave payment etc. by the contractor. Further, the Contractor has to make the payment to his workmen on or before 7th day of the following month directly into their bank accounts. In case Contractor fail to do so, RFCL being the Principal Employer will disburse the payment to Contractor`s workmen employed for this work and deduct the amount so paid from his bill. For this, RFCL will recover additional 25% of the total wage bill of the labour, as departmental/ administrative charges.

1.52.0 Loss to Owner (RFCL) during execution of Contract: It is understood by the Contractor that in the event of any losses/damages caused to the owner (RFCL) due to the reasons whatsoever within his control and the same losses/damages are approved, the Contractor has to make good all the consequential damages/losses to the Owner without any protest and demur. The damages/losses shall be apart from other claims/damages to which the Owner is entitled under the contract or in the course of Law. Except with the written consent from RFCL, the Contractor shall not disclose the contract or any provision of the contract to any third party

1.53.0 The Contractor shall ensure that all formalities, permissions, licenses required be complied under the existing laws of India and amendments thereof time to time for and in connection with this contract including

engagement / employment of laborers are duly complied with along with maintenance of all records and resisters as required under laws. The Contractor shall indemnify and keep indemnified RFCL from and against all actions, claims, demands and liabilities whatsoever under and in respect of the breach of any provisions pertaining to labor laws and/or against any claim, action or demand by any workman/ employee deployed by the Contractor or any third parties, in relation to work under this Contract.

1.54.0 Deleted

1.55.0 INDEMNIFICATION

The contractor shall have to furnish Indemnity Bond (as per format enclosed as Annexure-X) for value of Rs.....towards the material being sent for repair (This Clause shall be applicable for repair of materials).

1.56.0 "If a Bidder resorts to any frivolous, malicious or baseless complaints/allegations with an intent to hamper or delay the tendering process or resorts to canvassing/rigging/influencing the tendering process, RFCL reserves the right to debar such Bidder from participation in the present/future Bids up to period of 2 years".

1.57.0 Time Limit for Any Claim:

In case the Contractor fails to claim compensation, from RFCL on account of any claim under the contract, in writing to the Engineer In-Charge, within a period of one month of cause of action of such a claim arise, the Contractor shall be deemed to have waived of his right to claim the same.

1.58.0 Where any portion of the General Condition of Contract is repugnant to or at variance with any provisions of the Special Conditions of Contract, unless a different intention appears the provisions of the Special Conditions of Contract shall be deemed to over-ride the provisions of the General Conditions of Contract and shall to the extent of such repugnancy, or variations, prevail.

1.59.0 Priority of documents:

Except if and the extent otherwise provided by the Contract, the provisions of the General Conditions of Contract and Special Conditions shall prevail over those of any other documents forming part of the CONTRACT. Several documents forming the CONTRACT are to be taken as mutually explanatory of one another, but in case of ambiguities or discrepancies the same shall be explained and adjusted by the ENGINEER-IN-CHARGE who shall thereupon issue to the Contractor instructions thereon and in such event, unless otherwise provided in the Contract, the priority of the documents forming the Contract shall be as follows:

a. The Contract Agreement and its Appendices
b. The Letter of Acceptance/Work Order;
c. Special Terms and Conditions of Contract (STCC);
d. General Terms and Conditions of Contract (GTCC);
e. Instruction to Bidder or letter Inviting bid
f. Any other document forming part of the Contract.

1.60.0 Contractor engaging 20 or more workers must obtain valid Labour License for employing no., of persons as Contract Labour and it should mention the location and the maximum no. of contract labours to be employed/ engaged before actual execution of work and copy be forwarded to HR Dept., before actual execution of work. The contractor shall not undertake or execute any work through contract labour except under and in accordance with the license issued on that behalf by the Licensing Officer. The license may be renewed as per the requirement.

1.61.0 PROHIBITION OF CHILD LABOUR:

Engagement of child labour/adolescent is prohibited and any one violating this clause will be black listed and whenever there are violation of the provisions, the Company will resort to legal action as deemed fit. Person below the age of 18 should not be employed

1.62.0 Corporate Governance Certificate about Compliance of all Labour Laws: Under Companies Act, 2013 (Clause 49), it is mandatory requirement of the Principal Employer to certify that the Contractors are complying with all Labour Laws pertaining to the Payment of Minimum Wage including temporary Contact workers, Contribution deposited Regularly towards ESI & PF, Payment of Statutory Bonus so as to state that the Contractors of the Company are strictly adhering to the rules and regulations and are not violating any applicable Labour Laws. Hence, each Contractor/Agency to give monthly Undertaking with supportive documents stating that they are complying all Laws applicable for all the Contract workers including temporary workers engaged at RFCL site (Proforma attached as Annexure "XII"). and which should be counter verify by the Execution Dept. and after certification month wise, it is forwarded to HR Department

1.63.0

a. Weekly Off/Holiday:

All the Contract Employees must mandatorily be given a weekly day off (full day). All Contract Employee to get at least a three National Holidays (26th January, 15th August and 2nd October) as paid Holidays and also RFCL's Paid Holidays.

b.Pay during leave and holidays: Every employee shall be paid at a rate equivalent to the daily average of his wages for the days on which he actually worked during the preceding month exclusive of any earning in respect of overtime.

SPECIAL TERMS AND CONDITIONS & SCOPE OF WORK

A . Scope of Work:

1. IT INCLUDES BUT NOT LIMITED TO THE FOLLOWING:

1.1. Supply of complete raw material required for maintenance works of Hot and Cold Insulation including transportation, loading, unloading etc. strictly in accordance with detailed specifications in section materials and job specification and as per scope of work detailed in Schedule of rates.

1.2. Removal of Hot and Cold Insulation strictly as per instruction of Engineer-in-charge.

1.3. Application of Hot and Cold Insulation with old used insulating material / new insulation material including transportation of material to site, handling etc. in accordance with technical specifications of this NIT, IS Standards and instruction of Engineer-in-charge.

2. DETAILED MATERIAL AND JOB SPECIFICATIONS - HOT INSULATION

2.1. The Surface Temperature and Heat Loss / Gain for Hot & Cold Insulation should be as per IS 14164 (Latest). However, for Hot Insulation Surface Temperature should be 60°C as per Safety criteria.

2.2. INSULATION THICKNESS:

The insulation thickness for piping, vessels, Equipments etc. shall be confirmed and got approved from Engineer-in-charge before starting of the work. The insulation thickness for the various plants shall be as per drawing / instruction of Engineer in charge. Actual thickness of the insulation and type of insulation to be applied on a particular piping / vessels / Equipments shall be as per the instruction of the Engineer-in-charge and his decision in this regard shall be final and binding to the contractor.

2.3. INSULATION MATERIALS:

2.3.1 All the materials used for insulation, fixing and protection shall be new and shall confirm to the specification's details given below. However, if any old materials removed is in good condition the same can be used after getting approval of Engineer-in-charge. No payment will be made towards the cost of this old material. All insulating materials which may be chosen for a given service, it is essential that it shall not contain chemicals which may be harmful to the pipe or the protective cladding at ambient or service temperatures in wet or dry condition.

2.3.2 The insulating material shall be selected as per the service and the temperature of the system. For hot insulation mineral wool insulation shall be used. The term mineral wool shall be understood to mean a fibrous material manufactured from natural rock and does not refer to mineral wool manufactured from slag or glass. For the cold insulation Polyurethane rigid foam slabs or lags shall be used. However, all the insulation material used shall be as per the instruction of engineer-in-charge and shall be got inspected and approved from him.
Specification of Insulation material as per RFCL document at Annexure VI&VII.

2.4 REMOVALS AND APPLICATION:

The insulation areas to be removed will be shown by the Engineer-in-charge when required. The insulation has to be refixed on the same portions, similar to the old patterns and thickness with the instructions of Engineer-in-charge.

2.4.1 SINGLE LAYER INSULATION:
Blankets shall be dry installed on to the vessel and shall be secured with metallic bands.

2.4.2 MULTI LAYER INSULATION:

When insulation thickness exceeds 75 mm, the insulation shall be applied in multi-layers with all joints staggered. Each layer shall be separately secured with metallic bands.

2.4.3 All cracks and voids in main insulation shall be completely packed with loose mineral wool.

2.4.4 Insulation for Equipments/Piping of S.S. & Steam Traced Lines:

Aluminium Foils having a thickness of 0.1 mm, free from any defect such as pinholes etc. are to be used for covering all S.S. surfaces and steam traced lines before installation of insulation. A minimum overlap of 50 mm at all joints shall be provided and sealed with Barium Chromate interposed between the overlaps.

3.0 COLD INSULATION

3.1 The insulation thickness for piping equipment etc. shall be calculated based on normal operating temperature and shall be got approved by the Engineer-in-charge.

3.2 INSULATION MATERIALS

All materials used for insulation, fixing, sealing and protection shall be new and shall confirms to details given in Annexure VII. However, if the material removed is in good condition, it can be used again, after approval of the Engineer-in-charge.

3.3 REMOVALS AND APPLICATION

The insulation to be removed from piping, vessel, equipment etc. shall be shown by the Engineer-in-charge. The insulation shall have to be applied on the portion in similar to the old patterns and thickness with the instruction of Engineer-in-charge. All insulation material not to be re-used shall be removed from the plant area and dumped in the dump yard as per the instruction of Engineer-in-charge.

3.4 SURFACE PREPARATION

The surface to be insulated shall be cleaned dried and all surface irregularities shall be filled up with suitable approved sealers. One coat of anti-corrosive primer (Red oxide zinc chromate) shall be applied over the carbon steel surfaces to be insulated and allowed to dry before application of insulation.

4.0 INSULATION SUPPORT ON VESSELS

4.1 Suitable supports in the form of rings, lugs, studs or pins shall be used to support insulation on vessels and pipes. Block insulation of vertical vessels and piping shall be supported by support rings. Welding studs are not to be used on any vessel having shell thickness less than 3 mm or shell of aluminium or other alloy materials where sport welding s is not permitted on the vessel surface. Approval must be obtained from the engineer in charge before welding will be permitted on any vessels or equipment.

4.2 Support ring shall be 6 mm thick and shall be as per fig A 1 – A 6. In case of stress relieved vessels insulation supports shall preferably be shop welded.

4.3 If support rings are used on a vessel, the insulation of the head shall be held in place with bands radiating from a floating ring made of 6 mm round M.S rod. The bands shall be spaced not more than 300 mm apart at the tangent line. In case of cold insulation, lugs or supports shall in no case be more than 75 % of the total insulation thickness in order to not to puncture vapour barrier.

4.4 Stiffener angels, weld protrusions, ladder supports, insulation support rings, pipe hangers or any metal connections not otherwise scheduled to receive insulation shall be insulated if in direct contact with the cold surface in case of cold insulation. The insulation over such protrusions shall have an insulation thickness over them or at least 80 % of the thickness of the adjoining insulation. In all such cases the insulation shall be extended to ensure that the nearest exposed surface has temperature above 0°C or above dew point.

4.5 On large vertical vessels of a height of 6m or more and on continuous run of 6 m or more of vertical pipe, support rings shall be provided at intervals not more than 3m, such rings shall encompass the

vessel and pipe, and the material lugs thereon shall have a length equal to 75% of the total insulation thickness. Extra insulation shall be provided over the support rings. This shall extend for 25 cm on each side of the ring and shall be mitred to 45 cm for water shed on the upper.

4.6 Where studs, clips or pins are used to support insulation, their spacing shall be approximately 600 mm centre for blanket insulation and one per block for block insulation. Split pins, if used, shall be spread, bent over and imbedded into the insulation.

5.0 METHOD OF MEASUREMENT:

Measurements shall be taken over finished insulation surfaces for all types of insulated equipment.

a) Piping system: Area Measurement for all items shall be taken for outside surface of insulated piping. Measurement shall be taken along the centerline of piping system, which shall include fittings e.g. flanges, bends, tees, reducers and all types of valves etc. Measurement for branch connection shall be taken from the root of stub in connection. Reducers shall be paid along with the bigger size piping.

b) For pipefittings and valves, additional measurement for fitting or valve shall be paid as per the corresponding value given in table below:

METHOD OF MEASUREMENT OF INSULATION

TABLE-A Fittings - Equivalent (Meters) of Straight Pipe

Nominal Size (mm)	Elbows/ Bends	Tees, Caps Reducers	Flanges	Flanged Valves	Welded/Screwed Valves
12 to 65	0.45	0.3	0.8	1.5	0.6
80 to 250	0.45	0.3	0.8	1.5	1.5
300 & above	0.45	0.3	0.8	1.5	1.8

NOTE:

1) The equivalent lengths of valves are stated above are applicable only when removable insulation boxes are made. In case removable insulation boxes are not made, then equivalent Length shall be reduced by half.
2) For branch connection Tees with branch sizes up to 2" and the nominal diameter of the main pipe is 3" or more, no additional payment as per `Table-A' shall be made.
3) Miscellaneous fittings like unions, couplings, strainers, nipple, weldolets, sockets etc. shall be considered part of the straight length and no additional measurement shall be paid. All the piping as well as equipments/vessels insulation shall be properly sealed at the end with the same aluminium cladding as applied on the piping/equipments/vessels to prevent the ingress of the moisture in the insulation material.
4) Payments for steam-traced lines shall be made on the same rate as for non- steam traced line. In case of steam traced lines, which have not been specified as measurable separately, the pipeline size shall be reckoned as diameter of the circle enveloping the main pipe line and steam traced line(s) corrected to the nearest higher decimeter for purpose of measurement.
5) In case of application of "Thermo-Band" in steam tracing lines, measurement shall be taken separately. This will be paid as per the actual amount consumed at Site.

6.0 Equipments: The circumferences of cylindrical surfaces shall be measured outside the finished insulation including weather proofing jacket. The measurement of all surfaces including the dish end and other fittings (Nozzles/Projection/Manholes/Hand holes etc) of the vessels shall be as per IS 14164 (latest).

6.1 Instruments: Insulation of in-line instrument shall be measured in the same way as valves of the same size. No measurements shall be taken for other instrument and they shall be insulated within quoted rates for piping and equipments.

6.2 All expansion/contraction joints shall be taken as extra over the main insulation. Payment for each expansion/contraction joint will be made as straight length (Mtr) associated with it.

7.0 **COATING & WRAPPING OF UNDERGROUND PIPES**

The external surfaces of underground steel pipes shall be protected as follows:

7.1 The outer surface of piping and fittings shall be thoroughly cleaned of rust, grease, oil, dirt, moisture and foreign matter and shall be coated with one coat of Coaltar Primer to have uniform thickness all-round the pipes. The primer coating shall be free of bubbles, globules drips and runs.

7.2 After the first primer coat has dried and at least 24 hours after the application of first coat, a second coat of Enamel shall be applied by brush over the first coat. The total thickness of two coal tar/enamel coating should be 2.5 +/- 0.5 mm.

7.3 Before the second primer coat is dry, single layer of fiber glass "RP tissue" (0.5 mm thick) inner wrap shall be applied spirally around the pipe overlapping at least 12 mm and pulled into the wet second coating to contact closely to the contour of the pipe. It shall be ensured that the second coal tar coat impregnates the fiberglass wrapping.

7.4 After the second coat is dry, a third coat of Coal tar/Bitumen Enamel shall be applied without thinning to completely cover the fiberglass mesh.

7.5 Before the third coat is dry, a layer of (Coal tar impregnated Kraft paper) outer wrap shall be applied on a similar manner as described in 8.3 above. The wrapped pipe shall be allowed to dry thoroughly for not less than 48 hours.

7.6 The coverage shall not be greater than1.75 sq.m. per liter of coal tar/coal tar enamel. The total thickness of the coatings shall not be less than 3.2 mm. The thickness of the pipe coating shall be measured either by alcometer or by coating thickness gauge.

7.7 A length of 150 mm at the ends shall be left uncoated to facilitate welding. After the welding of the joints and successful hydrostatic testing of the installed pipe the coating and wrapping shall be applied at the welded joints in a similar way as.

8.0 Guarantee & Test Certificate

Insulation contractor shall guarantee all insulation works against the defect due to material and workmanship effecting performance for a period of 12 month from the date of completion of insulation works and shall repair/replace promptly, without cost, any part or parts of material that fails within said period.

All the test certificates required as per this document shall also be furnished along with the supply of material.

B. SPECIAL TERMS & CONDITIONS:

1. Contractor's Scope:

1.1 General Tools like open end/ring spanners, slide wrenches, Pipe wrenches, Screw drivers, Chisels, Hammers, Hacksaw, Punch, Tin cutters, files etc. All

1.2 Technically sound and experienced Supervisor for the supervision of work.

1.3 Construction of Store cum office inside the factory premises on the space provided by RFCL.

1.4 All the workmen of the contractor deployed against the contract by the contractor must wear Safety Shoe & Helmets and this is the sole responsibility of the contractor to provide Safety Shoe, Safety Helmets and other PPEs to their workmen, supplied by them.

1.5 Supervision of job shall be in Contractor's scope. However, a close liaison shall be maintained with the RFCL's Engineer In-Charge for day-to-day progress of the job.

1.6 Lodging and to & fro Local Travelling of their staff and workman from work site to their place of stay.

1.7 The necessary security arrangements, at his own cost, for his office & stores, to ensure safety of all Equipment/ Material.

1.8 Shifting of material, including scrap, from stores to site and vice versa.

1.9 To maintain minimum two hand trolleys of his own for shifting of materials. If require

1.10 Payment of all national and state holiday to contractor manpower are in contractor scope.

2. **RFCL's Scope:**

2.1 One-point power supply area as per requirement.

2.2 Compress Air, Construction Water, Construction Power, etc. as per requirement and availability.

2.3 Space for store cum office only will be provided construction will be under contractor's scope.

3. **Execution of Work:**

3.1 The work shall be executed strictly in accordance with the terms & Conditions laid down in this tender document

3.2 If at any time in the opinion of Engineer In-Charge, to improve the progress, Engineer in charge takes remedial action such as but not limited to:

3.2.1 Employ overtime operations.

3.2.2 Increase the number of shifts.

3.2.3 Work on Sundays and holidays.

3.2.4 Increase his resource deployment.

4. This clause supersedes the Clause No 1.1.0 of the GTC.

"The execution of the work may entail working in all the site and weather conditions and no extra rate will be considered on this account. The contractor may have to carry out the jobs to work round the clock as per our requirement and decided by Engineer In charge"

5. Clause 1.36.0 of Price Reduction Schedule may be read as

"It will be obligation on contractor to adhere strictly to the time schedule in LOA/Work order. In the event of work is not completed according to the time schedule, then, unless such failure is due to the Force Majeure as defined the clause 1.23.0 of GTC (or) due to RFCL defaults, then total contract price shall be reduced by 1% (one percent) of total value of work for every day delay (or) Part thereof, subject to ceiling of 10 % of total value of work, by way of reduction in price for the day, not as Penalty. The invoice raised shall be taken into account the above price reduction, if applicable and payment shall be released for reduced value only. If the contractor doesn't no raise invoice for reduced value, then the contractor shall issue a credit note equivalent to the price reduction amount. The decision of the Engineer InCharge with regard to the applicability of the PRS shall be final and binding on the contractor"

6. In case of safety violation Rs 1000 + GST per occasion will be imposed on contractor and it will be deducted from R.A Bill.

7. No escalation/de-escalation on the Billed value against Any Part of SOR is payable. the service charge ~~/profit margin amount~~ quoted by the bidder for these items will be remain same throughout the currency of the contract. No escalation/de-escalation is payable on this service charge ~~/profit margin amount~~. Similarly, no escalation/de-escalation is payable for other Parts of SOR.**This clause supersedes the clause 1.30.0.c of GTC.**

8. In case of Submission of Bank Guarantee (BG) as mentioned in the tender documents, EMD shall be released with first RA Bill.

9. Clause **1.3.2** of GTCC may read as, "RFCL may allocate land for putting up temporary Go-down/workshop for making storage, work site by the contractor free of cost.

10. **GTCC Clause No.1.8.0 (b)** may be read as "The Earnest Money should accompany the Tender in separate Envelope without which tender may not be opened and it may be considered as rejected at the sole discretion of RFCL" only

11. Party (vendor) may ask to submit form 26AS /16A along with the work completion certificate.

12. Schedule of Rates (SOR):

a. The bidder shall have to submit the Schedule of Rates Performa duly filled in, failing which their Price bid will not be accepted

b. Party shall quote single rate for each item. Any bid with the multiple rates quoted will be summarily rejected.

c. The Rates quoted should be inclusive of all Taxes except GST. Unless specified to the contrary in the bid, all present taxes and statutory levies other than GST shall be borne and paid for by the bidder. The GST will be reimbursed to the contractor against Tax invoice subject to submission of documentary evidence. Payment of the taxes and other statutory levies shall be the responsibility of the bidder and shall not be payable by RFCL.

d. The rates should be quoted only in Indian rupees and should be indicated both in words as well as figures. In case of any discrepancy, the amount quoted in words shall be treated as final. Any corrections made in the prices shall be authenticated with signatures at all places.

e. Rates filled in by bidder in SOR are immutable and final. If the bidder has forgotten or missed any item at the time of quotation, only nil rates shall be considered. Bids shall be evaluated on overall L 1 basis i.e. landed cost to RFCL

f. Wage Per Day Per Person (including statutory benefits with full break-up (Basic & VDA, ESI, EPF, Bonus Gratuity and others) (Minimum wages prescribed by the Minimum Wages Act of the Central Government/State Government whichever is higher should be protected.

g. Entire amount of wages remaining after deduction for statutory benefits to the personnel engaged will be paid to them in full by RTGS/NEFT into the individuals Account and proof of the same will be submitted along with the bills.

h. The quantities mentioned in SOR are indicative only, the payment will be released on the quantities actually executed.

i. Splitting of contract clause **1.27.0 (d)** of GTCC is not applicable.

13. GST amount bill be reimbursed to the contractor only after submission of supporting documents for payment of taxes to GST authorities and filing of returns as per GST laws.

14. <u>Additional Instructions to Contractor regarding statutory compliances –</u>

i. The contractor shall maintain sufficient staff so as to ensure that all the complaints are resolved on the same day.

ii. The staff may be called at any time apart from the working hours or may be called on including weekly off /Holidays based on the requirement. No extra payment shall be made by RFCL for that period.

iii. Extra manpower if required shall be mobilized by the contractor according to the quantum of job. without any extra cost to RFCL.

iv. Contractor should provide at least a three National Holidays (26th January, 15th August and 2nd October) as paid Holidays and also all RFCL's Paid Holidays to his manpower including supervisor. Contractor may obtain RFCL's Paid Holidays list from EIC.

(All manpower payment and overhead charges will be worn by the contractor)

v. Normal working hours per day = 08 hours (Excluding intervals time if applicable).

vi. Ordinary rate of wages (Mondays) = Basic salary not less than current time minimum wages (published by office of the chief labour commissioner (c) under ministry of labour & Employment).

vii. Overtime wages rate (per hours) = {ordinary rate of wages (per day) X 2 X Over time duty hours} /8

viii. If any contractor manpower performed full duty on weekly off, National Holidays and RFCL Holidays, contractor will provide wages on overtime rate to his manpower. No extra payment shall be made by RFCL for that period.

ix. No overtime shall be payable against shortfall of manpower by RFCL & same shall be borne by contractor.

x. If any contractor employee performed less than 8 hours duty on weekly off, National Holidays and RFCL Holidays, contractor will provide wages as per below formula without any extra cost to RFCL.-

= One day, s ordinary wages + [Duty hours x One day, s ordinary wages] / 8

xi. If any contractor employee perform duty beyond normal working hours, contractor will provide wages at the overtime rate. No extra payment shall be made by RFCL to the contractor for overtime.

Note: The points or clause of GTCC are not applicable or not for this contract same mentioned in STCC or mark cancelled on same place in GTCC.

HOT INSULATION

1.0 GENERAL

1.1 Scope

1.1.1 This specification covers design and material requirements for above ground, external insulation of piping and equipment operating between ambient temperature and 760°C for the purpose of heat conservation, process stabilization, temperature maintenance, personnel protection and fire protection. Wherever necessary this specification indicates the basis for selecting a criterion.

1.1.2 This specification is suitable for use in normal process plant atmospheres. Alternative designs and materials would be specified if necessary for corrosive atmosphere or potential leaks and spills of chemicals.

1.1.3 All the codes/standards mentioned in this specification shall be of latest issue.

1.1.4 This specification does not cover cold service insulation. For cold services, Specification 6-44-0003 is applicable.

1.1.5 This specification does not cover insulation for boiler or fired heaters and associated air heaters, economizers, flue ducting and air ducting.

1.1.6 Piping, equipment, storage tanks & vessels requiring insulation and the temperatures (operating temperatures) shall normally be specified, as applicable, on the following project documents:

- Piping and Instrument Diagrams (P&IDs) and Line Lists.
- Piping General Arrangement Drawings & Isometrics.
- Instrument Piping Details and Schedules.
- Vessel, Exchanger, Storage Tank and sphere documents and Insulation Schedules.
- Equipment suppliers General Arrangement Drawings for equipment items in Package plant.

2.0 DESIGN BASIS

2.1 Criteria

2.1.1 Insulation thickness tables are based on heat loss criteria. For various parameters considered for insulation thickness calculations 'Guideline for selecting insulation material & thickness', Document No. 7544-02-41-GL-56 may be refereed. **Selected 'Insulation thickness tables' for a particular job shall be as per 'Job Process design basis'.**

2.1.2 Insulation is required for any of the following purposes, as indicated in P&IDs and line lists:

- Heat conservation
- Process stabilization to assist process control.
- Steam tracing
- Electric tracing
- Hot water or solvent tracing (liquid)
- Hot oil tracing
- Steam jacketing
- Hot water or liquid jacketing

- Hot Oil Jacketing
- Fire protection
- Personnel protection.

2.1.3 Insulation for 'Personnel protection' is applicable where exposed surface temperatures exceed 65°C in normal or short-term operating conditions. Over internally insulated piping and equipments, provide open mesh metal guards and for surfaces which are not internally insulated, provide insulation on those parts of surfaces with which operating and maintenance personnel may come in contact while performing routine duties. The actual extent of insulation shall be determined by Field Construction Personnel and/or operating personnel using the criteria that the exposed surfaces located within 600mm horizontally or 2100mm vertically of a normal access, walkway or work area are to be insulated.

2.1.4 Internally refractory lined piping and equipment and any other items for which heat loss is essential shall not be insulated. (See para 2.3.6).

2.1.5 Insulation is not desired for piping and equipment for which heat loss is desired - excepting for personnel protection or to avoid thermal stress problems.

2.1.6 Instruments and associated piping(other than impulse piping/tubing) subject to operating flow and/or temperature conditions prevailing in the connected piping or equipment shall be insulated to the same requirements as that of piping or equipment. For impulse piping/tubing refer impulse piping insulation specifications described elsewhere in the document.

2.2 Extent of Insulation on Piping Systems

2.2.1 Insulated piping systems shall have straight pipe, bends, tees and pipe-fittings completely insulated.

2.2.2 Unless otherwise specified, all valves and flanged joints shall be completely insulated only in steam, condensate service, hot oil lines and in lines which are trace heated or jacketed to maintain temperatures.

2.2.3 For bucket and float type traps the inlet piping and trap shall be insulated.

2.2.4 Insulation on inlet piping to thermostatic and thermodynamic steam traps shall terminate at approximately 500mm before the trap.

2.2.5 Steam trap outlet piping other than closed condensate recovery system shall not be insulated except for personnel protection reasons.

2.2.6 Heat traced instrumentation shall be insulated. The fluid containing sections of such instruments and the associated piping shall be completely insulated. Indication length shall remain visible. Instrumentation other than heat traced shall not be insulated unless otherwise required by Instrumentation department.

2.2.7 Insulation shall not be applied to the following, unless otherwise specified.

- Piping which becomes hot intermittently, such as relief valves, vents, steam-out and snuffing steam systems, flare and blowdown systems.

- Steam condensate lines downstream of steam traps discharging to drainage system, unless otherwise mentioned.

- Supports for piping, excluding pipe hangers to the extent covered by insulation.

- Steam Traps (except as noted in paragraph 2.2.3).

- Valves, including control valves and flanges in process piping systems (except as noted in paragraph 2.2.2). However, personnel protection insulation for these items shall be applied, as required.

- Pipe Union fittings.

- Thermowell bosses, temperature and pressure tappings.

- Expansion joints, hinged joints and hose assemblies

- Sight flow indicators.

- Flange joints in Hydrogen service.

2.3 Extent of Insulation on Equipments

2.3.1 Support skirts of insulated vertical vessel greater than 1200mm diameter shall be insulated both internally and externally for a minimum distance of 600mm below the bottom tangent line. The insulation shall terminate not less than 300mm above the anchor chair.

2.3.2 Support skirts of insulated vertical vessels of 1200mm and less shall be insulated externally only, as described in para 2.3.1.

2.3.3 Bottom heads of insulated vertical vessels enclosed by a support skirt shall be insulated without finishing material and shall be insulated only when the vessel outside diameter is greater than 1200mm.

2.3.4 Turbines shall be insulated for heat conservation.

2.3.5 Liquid ends of pumps shall be insulated when heat traced and jacketed.

2.3.6 Insulation shall not be applied to the following unless otherwise specified:

- Pumps with operating temperature below 200°C unless pumped fluid has a pour point above minimum design ambient temperature.

- Fans, compressors and blowers.

- Liquid ends of pumps except as noted in the paragraph 2.3.5 above.

- Internally insulated or refractory lined equipment unless specially designed for metal temperature control.

- Heads of vessels enclosed by support skirts with vessel diameters 1200mm and less.

- Internal surfaces of insulated vessel support skirts with vessel diameter 1200mm or less.

- Turbine casings to be insulated shall exclude shaft seal caps, .shaft bearing housings, throttle valves, governors and supports.

- Exchanger channel and covers; shell and channel flanges & Exp. Joints.

- Nozzles flanges, manholes, handholes and flanges of equipment.

- Surfaces of coolers and condensers.
- Nameplates of all equipment items.
- Thermowell bosses, temperature and pressure tappings.

3.0 MATERIALS

3.1 General

3.1.1 Insulation materials shall be as per specifications described in para 3.2. **Selected material(s) for a particular job shall be as per Process Design Basis.**

3.1.2 All materials shall be of high quality and good appearance. Insulation materials shall be of low chloride content, chemically inert, non-sulphurous , rot proof, vermin proof, impervious to hot water and steam, non-injurious to health and non-corrosive to steel and aluminium (even if soaked in water at ambient temperatures for extended periods).

3.1.3 The use of insulation or finishing materials containing ASBESTOS in any form is not permitted.

3.1.4 No inflammable material shall be attached to the insulation.

3.1.5 Fibrous insulants, calcium silicate, perlite and ceramic fibres can be used for the full temperature range mentioned against the respective material, for all applications except for electrically heated applications .

3.1.6 For electrically heated applications Polyurethane foam (PUR) or Polyisocyanurate (PIR) blocks shall be used in combination, with rockwool as inner layer.

3.1.7 For low operating temperature (upto 125°C) services a suitable moisture barrier shall be used.

3.1.8 Insulation materials to be used over austenitic stainless steel surfaces shall be zinc free and shall be inhibited with sodium silicate as per ASTM C-795.The amount of leachable chloride in the insulation material (except for calcium silicate) before application shall not exceed 10ppm. In case of calcium silicate it should not exceed 50ppm. For the chemical analysis of insulation materials ASTM C-871 shall be referred.

3.1.9 Dimensions and dimensional tolerances for pipe sections, mattresses & slabs shall generally be as per respective codes unless otherwise mentioned. The number of pieces to be used shall be as less as possible. When installed the insulation shall fit snugly and shall have a tight joint.

3.1.10 The insulation materials shall be as per ASTM/BS standards/codes for overseas jobs unless otherwise specified.

3.2 Insulation Materials

3.2.1 Fibrous Materials (Rockwool & Glass Wool)

1 Shall be a preformed insulation and shall be of long fibred rock or glass material processed from a molten state into fibrous form bonded with a binder and suitable for the intended operational temperature range from ambient to 550°C and 350°C for rockwool and glasswool respectively. Slagwool is not acceptable.

2 Unless otherwise specified, insulation material shall strictly conform to all the requirements of quality standards listed below:

• Preformed pipe insulation	IS:9842/ASTM C547 TYPE II or TYPE III
• Metal-mesh covered bonded mineral fibre blanket and blanket type pipe insulation	IS:8183/ASTM C592 CLASSII for piping & equipt. Blankets shall be faced on one side with 20mm galvanised 22SWG wiremesh stitched through with 22 SWG galvanized lacing wire. For insulation over 'Austenitic SS Piping & Equipment' instead of galvanized wiremesh & lacing wire SS304/316 wiremesh & lacing wire shall be applied.
• Bonded Mineral fibre slab insulation	IS:8183
• Mineral fibre block & board thermal insulation	ASTM C612 TYPE IV/ TYPE V

3 Insulation shall conform to the requirements of respective codes, unless otherwise specified herein and shall be tested and test certificates on representative samples furnished as per IS:8183/IS:9842/ASTM:C547/ ASTM:C592 /ASTM:C612.

• Density(min)	140 & 128 kg/m^3 for resin bonded pipe sections and resin bonded LRB blankets respectively of rockwool; 80 & 64 kg/m^3 for resin bonded pipe sections and resin bonded curved beveled segments or LRB slabs respectively of glasswool. Max resin content at the above mentioned densities shall be 2% and 5% for rockwool and glasswool respectively. 140 kg/m^3 for IS8183 bonded mineral fibre slabs and 240 kg/m^3 /320 kg/m^3 for ASTM C612 TYPEIV /TYPE V respectively.	
• Thermal Conductivity(max)*	**Mean Temperature ^{O}C	Thermal Cond. (mW/cm ^{O}C)
	50	0.43
	100	0.52
	150	0.62
	200	0.68
	250	0.80
	300	0.90
*The values mentioned are for insulation material as per IS code; For Apparent thermal conductivity for material as per ASTM codes refer respective ASTM code.		
**Mean Temperature = (Hot Face Temperature + Cold Face Temperature) / 2		
• Linear Shrinkage	Not more than 2 percent when subjected to soaking heat at the stated max. temperature of use (550°C), for 24 hours.	
• Compressive Strength (minimum) at 10% deformation	250 kg/m^2 for resin bonded pipe sections, curved bevelled segments and LRB slabs; 120 kg/m^2 for LRB blankets(mattresses) unless otherwise specified.	
• Chloride Content	For stainless steels, with inhibitors less than 10 PPM, for other materials not to exceed 20 ppm.	

3.2.2 Rigid Materials (Calcium Silicate, Moulded Expanded Perlite, Polyisocyanurate/Polyurethane Foam Blocks and Cellular Glass)

1 Calcium Silicate

It shall be suitable for temperatures upto 760°C. Insulation shall conform to the requirements of respective codes, unless otherwise specified herein and shall be tested and test certificates on representative samples furnished as per IS 9428/ASTM C533 TYPE II.

• Bulk Density	200 to 280 kg/m^3.

• Compressive Strength	Reduction in thickness shall not exceed 10% when tested a) Dry under a load of 415 kN/m² and b) Wet (after 18 hrs immersion in water) under a load of 170 kN/m².	
• Heat Resistance	When tested at increasing temperatures, the material shall be deemed suitable for use under conditions of soaking heat, for 24 hrs, upto a temperature at which the following requirements are met: Max.Linear Shrinkage(length) Max. Loss in Mass Compressive Strength	 2% 15% Reduction in thickness not exceeding 10% under a load of 345 kN/m².
• * Thermal Conductivity (max)	**Mean Temperature °C	Thermal Conductivity(W/mk)
	200	0.080
	250	0.088
	300	0.097
	350	0.110
	400	0.121
	450	0.135
	500	0.148
• Chloride content	Not to exceed 50 PPM for CS as well as SS	
*The values mentioned are for insulation material as per IS code; For Apparent thermal conductivity for ASTM code material refer respective ASTM code.		
**Mean Temperature = (Hot Face Temperature + Cold Face Temperature) / 2		

2 Moulded Expanded Perlite

Insulation shall be block form and pipe sections in accordance with ASTM C 610. It shall be compounded from moulded expanded perlite & sodium silicate binder and shall be suitable for temperatures upto 550°C. Insulation shall conform to requirements of respective codes, unless otherwise specified herein and shall be tested and test certificates on representative samples furnished as per ASTM C 610. **'Perlite material shall be tested as per C-692 for application over SS surfaces'.**

• Bulk Density(min)	192 kg/m³. Test as per ASTM C302 (pipe) & ASTM C303(block)	
• Compressive Strength (for blocks only) at 5% deformation	412 kPa(Min). Test as per ASTM C165.	
• ApparentThermal Conductivity	Shall be as given below: Test method shall be as per ASTM C177/C518 (Block) & ASTM C335 (Pipe)	
	Mean Temp °C	Thermal Conductivity Max. W/mK
	93	0.079
	149	0.086
	204	0.095
	260	0.106
	316	0..111
	371	0.126
• Water Absorption of thermal insulation After heat aging & 48 hr water immersion, moisture gain, % by weight (max)	149	50
	260	50

	371	60
• Linear shrinkage	For length & width 2%(max) and for thickness 8%(max) at 649 ^{O}C for 24hrs	
• Chloride content	For stainless steels, less than10 PPM, for other materials not to exceed 20 ppm	

3 Polyisocyanurate (PIR) / Polyurethane (PUR)

Rigid Polyisocyanurate / Poluurethane foam block, pipe and fitting insulation shall be manufactured with polyester or polyether resins, flammability retarding agents, special catalysts and a blowing agent. This can be used upto a temperature of 125 deg.C. Insulation shall conform to following requirements and shall be tested and test certificates on representative samples furnished for conformance to each of the following requirements:

• Selection of samples for testing	As per ASTM C390 OR BS:2972 (Frequency of sampling clause IV). Unless otherwise stated, the test specimens shall be conditioned without external stress at 23±1^{O}C and 50±2 percent relative humidity for a minimum of 24 hours before testing.	
• Density	40 to 64 kg/m^3 To be tested as per ASTM C303 for Block-type and ASTM C302 for pipe covering.	
• Thermal Conductivity	Mean Temp. ^{O}C	Thermal Conductivity (Maximum) mW/cm deg
	10	0.238
	24	0.245
	38	0.252
	Thermal conductivity test shall be as per IS:3346 or ASTM C177. Specimen thickness shall be as per IS:3346 or 25mm per ASTM C177.	
• Comp. Strength (Min.)	After drying at 102°C - 120°C for constant mass as per ASTM C165, at 10% deformation or at yield point, whichever occurs first, shall be 205 KPa. Test shall be as per IS:11239 part X.	
• Water-vapour permeability (max)	8.5 & 5.5 ng/(Pa.s.h) for PIR & PUR respectively Test shall be as per BS5608 or IS12436	
• Fire properties	Insulation shall be self extinguishing type and shall satisfy the requirements for maximum extent of burn (less than 25mm for PIR and 125mm for PUR) when tested as per BS:5608 (Horizontal burning characteristics- max. extent of burn) or IS:12436	
• Flexural Strength	This is applicable to preformed pipe coverings only and shall be 275Kpa(min).Test shall be as per ASTM C446.	
• Humid aging	(Max. allowable value after aging at 60°C – 90 to 100% relative humidity)-Maximum percent change in linear dimension shall be 4. This limit applies to each of the three foam direction. Test shall be as per ASTM D2126.	
• Closed cell content	Minimum percent 85. Test as per BS:4370 Part – II (Test for closed cell content)	
• Dimension stability after heating	Test method as per IS:11239 Part – II The max. dimensional change at different temperatures shall be.. 100°C ± 2^{O}C (24 hr) 2% 125°C ± 2^{O}C (24 hr) 2%	
• Standard size and dimensions	Block	
	Length	upto 2400mm
	Width	upto 1200mm

	Tolerance	On length ±6mm On width ±3mm On thickness ±1.6mm
	Pipe Insulation	
	Length	750 to 1000mm
	Inside diameter	To suit standard steel pipe
	Shall be supplied as cylindrical shape slit in half lengthwise or as curved segments cut from blocks or moulded segments cut from blocks or moulded to shape. Upto 14" size, only pipe sections slit in half lengthwise shall be used.	
	Dimensional Tolerance:	
	Length	± 6mm
	Thickness	± 1.6mm
• Thickness	20, 25, 30, 40, 50, 60 and 75mm	

4 Cellular Glass

Cellular Glass formed and fused into unicellular form can be used upto a temperature of 350°C. Insulation shall conform to the requirements of respective codes, unless otherwise specified herein and shall be tested and test certificates on representative samples furnished as per ASTM C552.

• Density	110 to 147 kg/m³. Test as per ASTM C303 except that no drying will be necessary. Determine the no. of specimens as per ASTM C390.	
• Thermal conductivity (max)	Mean Temp°C	W/m.k
	149	0.078
	93	0.063
	38	0.052
	24	0.050
	10	0.048
	Thermal conductivity shall be tested as per ASTM C240, C177 and C518. Test at least 3 specimens.	
• Compressive Strength (Average min)	517 kPa Test as per method ASTM C240 and recommended Practice ASTM C165. Test at least four specimens.	

3.2.3 High Temperature Insulation Materials (Above 550°C)

Following types of insulations may be used for high temp insulation applications.

1 Ceramic Fibre

Ceramic Fibre shall be composed principally of Alumina silica fibre blanket. It should be used in the temperature range of 551°C to 760°C. Ceramic fibre blankets shall be made out of fibres having fibre length of about 10 cm or more. It shall normally be of 610 mm width, 13mm or 25mm thickness. Unless otherwise specified insulation shall conform to the requirements of ASTM C892 Type III, Grade 8 or to the specifications described in the table below. Insulation shall be tested and test certificates on representative samples furnished. Ceramic fibre blankets shall be sampled for the purpose of test in accordance with ASTM C390.

SL No	Chemical & Physical characteristics of Ceramic Fibre Blankets	Test Method
•	Chemical composition(By volume%)	

	Al_2O_3(Min)	43	IS 1335
	ZrO_2(Min)	-	IS-10085
	Fe_2O_2(Max)	0.1	IS-1527
	TiO_2(Max)	0.3	IS1527
	SiO_2(Max)	57	-
•	Mean Fibre Dia (Microns)		
	(Upto 3% Standard deviation)	2.5-3.5	BS-2972
•	Dimensional Tolerance		
	Thickness	(-) 0% to (+)40%	-
	Width	(-)2% (Excess is permitted)	-
	Length	(-)0% (Excess is permitted)	-
•	Shot Content(% Max)	20	ASTM C-892
•	Bulk Density(Kg/m³ Min)	128	ASTM C-167
•	*Bulk Density Tolerance	(+) 30% & (-)0%	-
•	Thermal Conductivity (Kcal/M/Hr/°C)**Max (Mean Temp)	0.11(600°C)	ASTM C-177/IS-3346
•	Linear Shrinkage(%) (at max temp) for 24hrs	3(1200°C)	ASTM C-356
•	Tensile Strength(Kg/cm²g(min)		
	Longitudinal	0.6	BS 1902 part 6
	Transverse	0.5	

* The density shall be calculated on the basis of actual dimensions and actual weight only, as offered by the manufacturer.

**In case of thermal conductivity, the test certificate from an international laboratory or any laboratory approved by department of Science & Technology could be considered. However, the same shall indicate values for other characteristics of the material. The test certificate shall not be more than 12 months old from the date of offer of material for inspection.

2 Calcium Silicate

For material specifications refer clause 3.2.2(1)

3 Combination Insulation of Ceramic Fibre (Inner layer) & Rockwool (Outer layer)

For material specifications refer clause 3.2.3(1) & 3.2.1

4 Combination Insulation of Cal. Silicate (Inner layer) & Rockwool (Outer layer)

For material specifications refer clause 3.2.2(1) & 3.2.1

3.2.4 Insulation material for Impulse lines

For impulse lines(Austenitic Stainless Steel), insulation material shall be sodium silicate inhibited Ceramic fibre rope insulation of min density 250 Kg/m³, unless otherwise mentioned. Ceramic Fibre rope shall be made up of Ceramic Fibre insulation. It shall comprise of ceramic fibres laid parallel and finally wrapped with stainless steel wire to reinforce the fibres and holding it in position. Other properties of ceramic fibre shall conform to the specifications as described in clause 3.2.3(1)

3.2.5 Additional Tests / Checks for Materials

Additional tests/ checks for density, thickness, shape and size as per the requirements shall be repeated at site at the time of delivery once for each lot. The Contractor shall perform these

tests in the presence of Client/Client's representative on the sample selected at random. In case of nonconformance the tests shall be repeated as per norms and frequency decided at site as per the directions of Site-in-Charge. In case of repeated nonconformance the complete lot of insulation material shall be rejected. Special attention is required for fibrous material as its installed thickness could be reduced due to compaction during transportation & storage and thus affecting performance.

- All the codes mentioned shall be the latest issues.

- Client/Client's representative/EIL shall have right to inspect any or all the tests conducted on insulation material by manufacturer at his shop or any laboratory.

3.2.6 **Quality Assurance Plan (QAP)**

Vendor shall prepare and submit the Quality assurance plan(QAP). The QAP shall include every stage of manufacturing process starting from raw material stage to final stage of manufacturing. The QAP shall also include reference of purchase order number and date, the types of checks, methods of tests followed, frequency of checks, lot size & acceptable criteria with permissible deviations.

3.3 **Weather Protection Jacket**

3.3.1 Unless otherwise mentioned, aluminium jacketing shall be used as weather protection over insulation except in fire hazardous areas /above 550°C where it should be stainless steel or aluminized steel. For grade piping in offsites jacket material shall be galvanized steel. Galvanized jacketing shall not be used over insulation on or near austenitic stainless steel and/or austenitic nickel steel Piping & Equipment. Aluminium jacketing shall be as per ASTM B209 Alloy 3003 H16 or IS:737 designation 31000 condition H3 for flat sheets and designation 31500/51300 condition H4 for corrugated sheets. For stainless steel cladding, the materials shall be in accordance with ASTM A167 or A240, type 304 or 316. For aluminized steel cladding, the material shall be in accordance with ASTM A463, type2, coating designation T2-100. Galvanized steel shall be as per IS:277/ASTM A526 with 275 gms/m² of coating. Cladding (other than galvanized steel) shall be coated on the side in contact with the insulation with a polycraft moisture barrier consisting of one layer of one mil high density polyethylene film with a protective layer of 40-pound minimum virgin kraft paper. Polykraft moisture barrier shall be heat laminated and applied in factory. As an alternative 3 mil thick Polysurlin is acceptable. Thickness of the jacketing shall be as follows:

1 Fibrous Material (Rock, Glass Wool & Ceramic Fibre)

•	**Application**	**Thickness for Aluminium cladding (other than grade piping in offsites - Refer note below)**	**Thickness for Stainless steel /Aluminized steel cladding**
•	For shells of vertical storage Tanks & Vessels	0.71mm (22 SWG) Corrugated; The profile of corrugated sheet shall be 32mm 5mm	0.56mm (24 SWG) Corrugated; The profile of corrugated sheet shall be 32mm 5mm
•	For tank Roofs	1.22mm (18 SWG) Flat	0.91mm (20 SWG) Flat
•	For Horton Spheres & Horizontal vessel shell and heads; vertical vessel heads	0.71mm (22 SWG) Flat	0.56mm (24 SWG) Flat
•	For removable covers	1.22mm (18 SWG) Flat	1.22mm (18 SWG) Flat
•	For all piping, other than grade piping in offsites	0.71mm (22 SWG) Flat	0.56mm (24 SWG) Flat

•	**For grade piping in Offsites**	**0.56mm (24 SWG) Galvanized steel (Refer note below)**

Note: For grade piping in offsites the cladding material shall be Galvanized steel.

2 Rigid Material (Calcium Silicate, Moulded Expanded Perlite, Polyisocyanurate, Polyurethane Foam(PUR) Blocks, Cast-in-situ Polyurethane foam and Cellular Glass)

•	**Application**	**Thickness for Aluminum jacket / cladding**	**Thickness for Stainless steel / Aluminized steel jacket/cladding**
•	Piping, Horizontal Vessel head & Tanks Roof	0.56mm(24 SWG) flat	0.46mm(26 SWG) flat
•	Vertical Vessel Shells & vertical portion of storage Tanks.	0.56mm (24 SWG) corrugated. The circular profile of corrugated sheet shall be 32mm 5mm	0.46mm (26 SWG) corrugated. The circular profile of corrugated sheet shall be 32mm 5mm
•	Removable covers	1.22mm (18 SWG) Flat	1.22mm (18 SWG) Flat

3.4 Ancilliary Materials

3.4.1 Securement Bands / Wires

1 If material is Aluminium, then specification shall be ASTM B209 Alloy 3003 H16 or IS:737 designation 31000 (Old NS3) condition H3; If Stainless Steel, it shall be 18/8.

2 For securing fibrous insulation

A On Piping
Band, 24 SWG thick x 12mm (min) wide, Stainless Steel.

B On Equipments
Band, 24 SWG thick x 20 mm wide, Stainless Steel.

C On Vertical Storage Tanks
Band, Stainless Steel, 25mm wide x 24 SWG thick.

D Horton Sphere
16 SWG SS Wire & Band, Stainless Steel, 25mm wide x 0.8mm (min.) thk.

3 For Securing Rigid Insulation

A On Piping upto 16" OD
Wire, stainless steel, 16 SWG.

B On Piping 18" OD & Larger, Vertical and Horizontal equipments
Band, stainless steel. 20 wide x 24 SWG thick.

4 For Securing Cladding on Insulation (all types)

A For Piping
Band, SS 12mm (min) wide x 24 SWG thick.

B On Equipment
Band, SS, 20mm wide x 24 SWG thick.

C On Vertical Storage Tanks & Spheres
Band, Stainless Steel, 25mm wide x 24 SWG thick.

3.4.2 **Rivets**

Rivets required for metal jacket securement shall be the expanding Aluminium "POP" blind eye type/ Stainless Steel, 9.5mm long x 5mm diameter.

3.4.3 **Screws**

Screws required for metal jacket securement shall be Stainless Steel/cadmium plated steel self tapping type A No.8 dia x 12mm long to BS 4176 complete with neoprene washers under the head.

3.4.4 **'S.' and 'J' clips**

- Formed from 25mm wide stainless steel banding.

3.4.5 To ensure perfect water proofing, all the cladding joints shall be packed with sealing materials which may either be in the form of a elastomeric sealing compound or fibre based bituminous felt strips.

4.0 APPLICATION

4.1 General

4.1.1 The application methods, given in this Standard are general in nature. The Contractor is responsible for applying an insulating system that will give a satisfactory operational performance and the requirements given herein shall be regarded as the acceptable minimum. The Contractor shall carryout the work in accordance with the best practices of insulation application with the minimum of waste and debris and the final job shall have a neat, efficient and workmanlike appearance.

4.1.2 The insulation shall be so designed/applied such that ingress of water is prevented, leaked product can drain off and vapour can escape.

4.1.3 All hydrostatic tests on piping and equipment, including steam tracing systems, shall be carried out before insulating material is applied.

The insulation Contractor shall only insulate those sections of the plant that have been specifically released for such work by the engineer-in-charge. If insulation must be installed before pressure test, then all welds and flanged joints in the pipe shall be left uncovered till successful completion of pressure test. Then insulation shall be completed.

4.1.4 Surfaces to be insulated shall be thoroughly cleaned, dried and made free from loose scale, oil or grease. It shall be the Contractor's responsibility to remove loosely adhering scale and dirt before applying insulation.

4.1.5 **Corrosion Prevention**

Piping, Equipment, Tanks etc shall be protected against corrosion by painting under insulation as per specifications described below:

Sl. No.	Design Temperature in °C	Surface Preparation & Pre-erection/Shop Primer	Paint system (Field)		Total Final DFT in Microns (min.)	Remarks
			Primer	Finish paint		
1	Insulated carbon steel, LTCS and low allow steel Piping, Storage Tanks, Equipment etc					
A	-45 to 125	SSPC-SP-10; 1coat of F-9 @ 65-75μ DFT/coat	None	2 coats of F-14 @ 125μ DFT/coat; (2x125=250) or 3 coats of F-15 @ 80μ DFT/coat ; (3x80=240)	315-325 or 305-315	No over-coating to be done on F-9 as it will lead to mud cracking.
B	126-400	SSPC-SP-10; 1coat of F-9 @ 65-75μ DFT/coat	None	3 coats of F-12 @ 20μ DFT/coat; (3x20=60) or 1 coat F-16 @ 60 μ DFT/coat	125 – 135	F-12 shall be ambient temperature curing type
2	Insulated stainless steel including Alloy-20 piping (Note:2)					
A	Below 0°C to all minus temperature	Aluminium sheeting with aluminium foil and "Chloride free mineral sealant coating barium chromate" shall be applied.				If the piping & equipments are already erected than surface shall be prepared by cleaning with emery paper and wash/flush with chloride free DM water followed by wiping with organic solvent
B	0 to 125	SSPC-SP-10 (15-25μ surface profile) 1 coat of F-14 @ 125μ DFT/coat	None	1 coats of F-14 @ 125μ DFT/coat;	250	
B1	0 to 125 (alternate)	SSPC-SP-10 (15-25μ surface profile) 1 coat of F-15@ 80μ DFT/coat	None	1 coat of F-15 intermediate coat @ 80μ DFT/coat + 1 coat of F-15 finish coat @ 80μ DFT/ coat; (80+80=160)	240	
C	121 to 400	SSPC-SP-10; 1 coat of F-16@ 125 μ DFT/coat	None	1 coat of F-16@ 125 μ DFT/coat	250	
D	401 to 600	SSPC-SP-10; 1 coat of Amercoat 738 @ 125μ DFT/coat	None	1 coat of Amercoat 738 @ 125μ DFT/coat	250	Only Amercoat 738 is suitable for the temperature of 600 deg.C and cyclic temperature.
E	Cyclic service (-)196 to 480 excepting (-)45 to 120	SSPC-SP-10 1 coat of Amercoat 738 @ 125μ DFT/coat	None	1 coat of Amercoat 738 @ 125μ DFT/coat	250	
3	No painting is required for insulated monel, incoloy and nickel lines.					

Notes

1. The blast cleaning abrasives for SS and Alloy steel surfaces shall be SS grits/shots or Aluminium oxide grits/shots.
2. For SS surfaces with cyclic temperature of -45 to125 deg.C, both A & B(B1) are applicable.

ABBREVIATIONS :

F-9	:	Inorganic Zinc Silicate coating
F-12	:	Heat resistant Silicone Aluminium paint
F-14	:	Specially formulated polyamine cured coal for Epoxy coating
F-15	:	Epoxy phenolic coating
F-16	:	Engineered Polysiloxane coating

4.1.6 The insulation contractor shall not carryout any welding or drilling on plant equipment and piping.

4.1.7 Insulation shall be finished, bevelled and weatherproofed at all terminal points where it is required to remove bolts etc. without damage to the insulation.

4.1.8 Equipment nameplates shall remain visible after insulation has been applied by bevelling back the insulating material and carefully sealing the exposed edges to prevent ingress of moisture.

4.1.9 All projections, such as lifting lugs, trunnions and stiffeners on piping and equipment (i.e. vacuum rings) shall be insulated with the same thickness of insulation as specified for the equipment item or pipeline.

4.1.10 Thermowell bosses, pressure tappings and weephole nipples shall not be insulated in but left accessible.

4.1.11 For Insulation thicknesses upto 75mm only single layer insulation shall be used. Multi-layer insulation shall be required when the insulation thickness is greater than 75mm with the inner layer being larger. Insulation installed in two or more layers shall be staggered joint construction and each layer shall be secured in place and details of securement shall be the same for each layer.

4.1.12 Wet or Damaged Insulation shall not be used under any circumstances

Material awaiting its protective cover shall be adequately protected from damage, rain and contamination and shall be covered with cladding at a minimum loss of time.

4.1.13 A minimum clearance of 25mm between outside surface of any insulation finish and adjacent equipment, pipe or structural members shall be maintained.

4.1.14 Insulation supports shall not project out of the insulation outer surface and shall be given sufficient coverage of insulating material to avoid hot spots on the metallic cover at support positions.

4.1.15 Where insulated horizontal piping is supported on steel shoes, the height of the shoe shall be such that the underside of the insulation finishing material is clear of the supporting structure upon which the shoe rests by 25mm minimum.

4.1.16 Pieces of insulation with crushed and damaged ends shall not be used.

4.2 Piping

4.2.1 Standard Shapes of insulation

1 Fibrous Material (Rock or Glasswool)

Shall be preformed pipe section in 2 halves for sizes upto which manufactured and at least for all pipes with outside diameter over insulation of 500mm. In bigger sizes, multi-segments are preferable if manufactured, otherwise, blankets are acceptable.

2 Calcium Silicate / Moulded Expanded Perlite

Hollow cylindrical shapes slit in half lengthwise (in a plane including the cylindrical axis) or as curved segments. Upto 14" pipe size, only hollow cylindrical shapes slit in half lengthwise shall be used. Pipe sections bored / machined out of blocks shall not be used.

3 Polyisocyanurate / Polyurethane

Shall be supplied as cylindrical shape slit in half lengthwise (in a plane including the cylindrical axis) or as curved segments cut from blocks or moulded to shape. Upto 14" pipe size, only pipe sections slit in half lengthwise shall be used.

4 Cellular Glass

Shall be supplied as cylindrical shape slit in half lengthwise (in a plane including the cylindrical axis) or as segments. Upto 14" pipe size, only pipe sections shall be used.

5 Ceramic Fibre

Shall be supplied in blanket strips in sizes as mentioned in the material spec in clause 3.2.3.

4.2.2 **Application**

1 Horizontal Pipe

A General

Insulation material shall be applied to fit snugly against the contours and shaped only where necessary to achieve this requirement. The insulation shall be carried out with the least number of material pieces as possible and all unavoidable gaps, cavities, and voids suitably filled up compatible loose fill material.

B Pipe Section / Moulded Blocks / Segments

- End joints of adjacent blocks shall be staggered one half of the length of the block.

- Included angle between segments shall not be less than 30 deg. for both single and double layer insulation.

- Further, minimum arc length of segments should meet following staggering requirements.

When double layer is applied, both longitudinal and circumferential joints shall be staggered. The arc between the longitudinal seam lines of the inside and outside layers of insulation shall have an angle of over 15 deg. or the longitudinal joints staggered at least by one layer thickness, whichever is more stringent. Circumferential seams of the inside and outside layers shall be at least 100mm apart.

C Blankets (Fibrous insulation - Rock or Glasswool)
Shall be applied over the surface with joints tightly butted and laced together with 1mm diameter galvanized lacing wire.

D Insulation Securement (All insulation materials)

Each layer of insulation shall be secured firmly in place with at least 3 loops of binding wire / band, one loop to be placed not more than 75 from each end and at least one loop to be equally spaced between end loops, for each section. Binding wire shall be drawn about the insulation with ends tightly twisted

together, bent under & pressed into the surface of insulation. Bands or wires in no case be spaced more than 200mm apart.

- For calcium silicate & Moulded expanded perlite, all joints shall be sealed with insulating cement of same composition as the Moulded block.

- For Cellular glass, Polyurethane foam and polyisocyanurate, joints shall be sealed with suitable compatible material.

- Each layer of insulation shall be secured by the same method as above.

E Frame work for supporting cladding fibrous insulation (See Fig: 3 and 4)

This is not necessary for rigid materials. This is required only for horizontal pipe runs provided with fibrous insulation, in blanket forms; vertical piping provided with fibrous materials need not be provided with this. Piping provided with fibrous resin bonded pipe sections also need not be provided with this framework.

Spacer rings shall be fabricated out of 25x3 M.S. Flats. The outside diameter of these rings shall be equivalent to the outside diameter of the insulation. Spacer rings shall be riveted to 'Z' shaped stays fabricated from the same sized M.S. Flats. These rings shall be suitably painted for corrosion protection. Stays shall be provided at intervals of not more than 300 along the circumference of the insulation, subject to a minimum of 3 stays. Spacer rings shall be provided at every approx. 900. To minimize direct heat conduction through the stays, a packing of 2 sheets of 3 thick mill board shall be provided at the joints of the stays and pipes. Joints between M.S. Spacer Ring and stays shall be riveted by 6 dia M.S. Rivets with 2 Sheets of 3 thick mill board interposed.

2 Vertical Pipe (All insulation materials) (See Fig.5)

Insulation on vertical or near vertical piping (i.e. greater than 45 deg. angle from horizontal) shall be supported by bolted on metal collars. Metal collars shall be of 6 thick M.S. or Alloy Steel bar (to suit piping material).

Outside diameter of collar shall be around 12 less than O.D. of insulation. Where multi-layer insulation is used, support collar shall be extended to provide for each layer.

Support positions shall be at no greater distance apart than the following:

Pipe operating Temp.(^{o}C)	Support Spacing
Upto 400	4500mm
401 to 500	3500mm
501 to 550	2500mm
551 to 650	2000mm
651 to 760	1500mm

3 Expansion Joints (Both vertical and horizontal piping. All insulation Materials) (See Fig.5)

Expansion joint shall be provided at regular intervals as below:

Temp (^{O}C)	Spacing (m)
Upto 200	Not required
201 to 300	10
301 to 350	8
351 to 400	6
401 to 550	5
551 to 650	4
651 to 760	3

Expansion joint shall be formed by a 25mm space between the pipe insulation sections and the space shall be filled by compressed mineral rock fibres. Expansion joints in each layer shall be offset at least 150 from each other in case of multi layer insulation. Expansion joint for first layer for vertical pipe shall preferably be just below insulation support collars.

4 Elbows and Bends (All insulation materials) (See Fig.6 and Fig.7)

Insulation material shall be mitred and shall be same as that of pipe. Insulation securement bands/wire shall be same as that for equivalent dia pipe. Each mitred section shall be secured with minimum 2 wires/bands. For bends / elbows of nom. pipe size 6" & below, due to lack of space, for all insulation materials, insulation shall be secured by spirally wound 16 SWG SS wire for hard materials & 10 SWG SS wire for soft materials. Insulation joints of block material shall be suitably sealed with adhesive for isocyanurate /PUR/cellular glass and by insulating cement for calcium silicate/Moulded expanded perlite. Fittings below 50mm nom. dia, if insulated of calcium silicate/Moulded expanded perlite, shall be insulated with insulating cement build up in 6mm layers to the thickness of insulation of the adjacent piping. Each layer of insulation cement shall be reinforced with 25mm No. 20 SWG wire netting.

5 Tee (All Insulation Materials) (See Fig.8)

Preformed pipe sections or segments shall be carefully cut and shaped around "Tee,' junctions and the insulation material of the tangential pipe shall be carefully and neatly cut to mate upto the material applied to the parent pipe without the creation of voids or gaps, at the junction. Insulation shall be adequately secured by wire / bands of same specification as that of same size pipe.

6 Flanged Joints or Valves (all insulation materials (Fig.9 and 10)

Flanged Joints or Valves, if to be insulated, shall be insulated with prefabricated removable covers, lined with pipe sections / lags / slabs.

Welded valves, if insulated, shall be insulated with oversized pipe sections or lags, cut and shaped to fit around the body of the valve. Insulated valves shall be completely covered, but the insulation shall be cut and shaped around the valve stem and kept clear of the stuffing box gland.

7 Insulation Flashing (all insulation materials)

Insulation shall be stopped short of flanged joints and unions by a sufficient distance to permit easy removal of the flange nuts and bolts or breaking of the unions to take place without disturbance or damage to the insulating material. At these positions the insulation shall be beveled and sealed with a metal closure which in turn shall be sealed with waterproof sealing material.

8 Pipe Supports: (All insulation materials) (Fig.11)

Insulation at solid welded or clamped supports shall be cut and shaped to fit around the support and banded securely to enable the insulation to be carried with the pipe movement. When the pipe hangers pass through insulation on piping outdoors, metal hoods packed with a waterproof sealing material shall be furnished and installed. Upper bolts of the hanger clamps are not to be covered with insulation.

9 Steam Traced Piping (All insulation materials) (Fig.12)

Steam traced piping and fittings shall be installed with oversized sections to allow accommodation of both parent pipe and tracer without damage or deformation of the insulation. Traced instrument line and fittings shall be totally enclosed by the insulation in a similar manner and the designed warm air annulus maintained throughout the tracer pipe length. Insulation supports for vertical pipe shall have suitable clearance for tracer pipe. Composite box type insulation may be provided on the steam supply lead lines, in case they are routed together similarly this may be provided for the return lines to manifolds after the run of tracers.

10 Electrical Traced Piping (Polyisocyanurate / PUR)

Electrical traced piping shall be provided with the same size insulation as would be provided if the piping were not electrically traced, unless otherwise specified.

4.3 Horizontal Equipments

4.3.1 Standard Shapes of insulation

1 Fibrous Material (Rock or Glasswool)

Shells: Preferably preformed pipe or multi pipe segments or slabs cut and shaped to fit. Alternately, blanket may be accepted.

Heads: Preformed blocks and slabs cut and shaped to fit. Alternatively blanket may be accepted.

2 Calcium Silicate/ Perlite/ PUR/ Polyisocyanurate/ Cellular Glass

Curved segments / blocks, mitre cut and shaped to fit.

3 Ceramic Fibre

Shall be supplied in blanket strips in sizes as mentioned in the material spec in clause 3.2.3.

4.3.2 Application (All Materials)

1 Following provided by the vessel fabricator for insulator / cladding support / securement, as indicated in enclosed sketch No. 7-12-0033, shall be verified for their presence by the insulation contractor, before commencing insulation work:

- For vessels of diameter 2000mm and above are provided insulation support at horizontal centre line as also vertically at tangent lines. Ring support at tangent lines are provided with 6mm diameter holes. These are to be used for insulation securement.

- At vessel heads above 600mm outside diameter are provided flats having 6mm dia holes. The flats are for insulation support and holes provided in them are to be used for insulation securement. Also provided on either head is a central ring made of 10 dia galvanized steel rod. For vessels which do not have central nozzle, these rings shall not be provided by vessel fabricator. For such vessels, insulation contractor shall provide these rings.

- Boot of vessel, if any, is provided with circular support ring with holes, as indicated in sketch.

2 Blanket shall be applied over the surface with joints tightly butted and laced together with 1mm dia galvanized lacing wire.

Other block insulation shall be applied with the longer dimension parallel to the axis of the vessel or equipment. When blocks are applied in multiple layers, all joints in successive layers shall be parallel to the long axis, shall be staggered and sealed with insulating cement for calcium silicate or suitable adhesive for others. In all cases, the insulation is to fit the contour of the vessel or equipment, so that the use of a leveling coat of insulating cement should not be normally necessary to get an acceptable smooth exterior.

3 Special considerations for insulating high temperature Vessels (Required only if provided with calcium silicate insulation) (Fig. 15)

This provision is required to take care of the effects of equipment circumferential thermal expansion on insulation.

This provision is required only for vessels and Exchangers provided with calcium silicate insulation.

Calcium silicate insulation should be installed in bevelled or curved segments only, to avoid voids and provide an efficient insulation system.

For equipments upto 3000mm in diameter and 200°C, to take care of equipment circumferential expansion, the circumferential block is cut and fitted to be 13mm greater in circumference than the equipment and secured so that tension of the bands produces compression on the butt edges rather than on the surface towards the vessel; the little annular space and the compressiveness of the blocks would suffice to take care of circumferential expansion of equipment.

If the vessel is above 3000mm in diameter or if temperature is above 200°C or both, a 25mm thick Rockwool fibre blanket insulation shall be applied around the equipment prior to the application of calcium silicate. This acts as an expansion area around the equipment to act as mechanical and sometimes thermal cushions. The calcium silicate block must be cut and fitted to the outside radius of the equipment plus the thickness of the Rockwool spacer insulation. The insulation, when installed, should not compress the fibrous blanket.

Above provision to take care of circumferential expansion is required both for shell and head.

4.3.3 Insulation Securement (for all insulation materials) (Refer Fig.13 and 14)

Each layer of insulation on shells of equipment shall be secured by bands at every 225 centres. Each band shall be machine stretched and tensioned to remove slack only.

Each layer of insulation on vessel heads shall be secured as follows:

Band shall be in radial direction connecting the head central floating ring and shell girth ring. The radial bands shall be placed at not more than 150 centres for rigid and 300 for fibrous insulation, measured at the girth ring. These bands shall be machine stretched and sealed. Outermost layer of insulation shall also be supported by drawing and securing 16 SWG annealed wire through the 6 diameter holes provided in the shell girth ring as also the flats provided on heads. The wire shall be drawn through every hole and it shall be secured to the ring with a knot.

4.4 Vertical Equipments

4.4.1 Standard Shapes

Shapes for different materials shall be same as specified for horizontal equipment.

4.4.2 Application (For all insulation materials) (Fig 16 & 17)

Application details on shell, top and bottom heads shall be similar to that of horizontal equipment. Insulation shall be laid on insulation support rings provided by the fabricator. See Standard 7-12-0025.

4.4.3 Insulation Securement (For all insulation materials) Fig. 16, 17 & 18)

Bottom and Top Head insulation shall be supported by 16 SWG SS wire drawn through holes in the insulation supports provided by the fabricator.

Top head insulation shall be secured by floating ring/bands provided by vessel fabricator similar to head of horizontal vessel.

Shell insulation shall be supported by bands at every 225 centres on the cylindrical portion and the bands shall be kept horizontal.

Insulation Securement for Bottom head for vessel supported on legs shall be identical to that of Top head.

For insulation securement of bottom heads inside skirt no floating rings/bands need be provided; Firm securement should be ensured just by 16 SWG annealed SS wire drawn over insulation tightly and through the holes on support rings provided by the fabricator.

4.4.4 Expansion Joints (All insulation materials)

Expansion joints shall be provided every 4000mm (max.). The joint shall be provided at insulation support rings. It shall be a 25mm space between the top of the insulation and the bottom of the support ring. The space shall be filled up by compressed rockwool fibre.

4.5 Flange, Nozzle, Channel Cover, Manway & Handhole Flanged Cover (For All Insulation Materials)

Where insulation is required, these shall be insulated with lined removable prefabricated covers secured with bands or quick release toggle clips.

Otherwise, insulation shall be stopped short of uninsulated flanges and nozzles etc., a sufficient distance to permit withdrawal of bolts without disturbing the insulation. Insulation shall be weatherproofed and sealed at these locations.

4.6 Irregular Surfaces Such as Pumps, Compressors, Turbines etc.

4.6.1 Application

1 Fibrous Material: Material, application and insulation securement

This shall be Prefabricated removable covers, lined with pipe sections / lags / slabs / mattresses.

2 Calcium silicate/Moulded Expanded Perlite

Insulation material shall be loose fill insulating cement/block insulation cut and fitted.

Insulation shall be applied in maximum 25mm thick layers until the scheduled thickness is obtained.

Each layer shall be covered with a layer of 25mm hex. 20 SWG galvanised iron wire mesh for other than SS surfaces and with SS wire mesh for SS surfaces. The final layers shall be trovelled to a smooth finish with a 6mm thick finishing cement.

Insulation shall be beveled back at 45 deg. from all casing flanges, shaft seal caps and bearing boxes.

4.7 Vertical Storage Tanks (Carbon Steel)

4.7.1 Standard Shapes of insulation

1 Fibrous Material (Rock or Glasswool)

Shall be in slab form..

2 Polyisocyanurate / Polyurethane foam

Shall only be foamed cast in-situ.

4.7.2 Application

1 Supporting rings / spikes (rods) for supporting insulation / cladding

A Shell

Refer Standard 7-13-0003 Sh.1&2 of 2. This Standard indicates the extent of insulation / cladding supporting / securement details provided by tank fabricator. Insulation contractor shall check for its presence before insulation application work. Following is provided by tank fabricator :

Water Shed

At the junction of shell and roof, a watershed is provided to act as top covering for the shell insulation as shown in Std. 7-13-0003.

Insulation Support

Insulation support will consist of 5mm dia steel rods provided at 400mm dia diamond pitch. Length of these lugs is 3mm less than insulation thickness.

Cladding Support

From tank top, horizontal rings shall be provided at every 1175mm on tank shell.

B Tank Roof

Shall be provided as per Standard 7-13-0003.

2 Insulation laying and securement

A Shell (Application of fibrous insulation)

Insulation shall be applied between rings in horizontal mode. Mattresses insulation shall be applied with joints tightly butted and laced together with 1mm dia. galvanized lacing wire. Matts shall be impaled to the 5mm rod and speed washers fixed and pressed home for intimate contact of the insulation. In the case of multiple layers, speed washers are necessary only over the final layers, (upto and including 150mms). Rods and speed washers of spring steel should be selected to suit each other. While rods are provided by tank fabricator, speed washers shall be furnished by insulation contractor. Insulation shall be further secured by bands spaced centrally between insulation supports.

Shell (Application of Polyisocyanurate / Polyurethane foam)

Shall be foamed cast in-situ as per vendor's procedure (approved by EIL/Client/Client's representative) and to the satisfaction of Site-in-Charge. The minimum requirement for thermal conductivity, density, compressive strength, fire properties and water vapour permeability shall be as per para 3.2.2(3). Depending upon the application the thickness of cladding and bands shall be as per para 3.3 & 3.4 respectively. Contractor shall ensure that cladding & band thicknesses are capable of withstanding foaming pressures which are developed at the time of injection of foam. Contractor can use foamed cast in-situ insulation only after getting the approval to material specification and application procedure.

B Roof (For all materials)

Application of both fibrous, polyisocyanurate and Polyurethane foam shall be similar to that as for shell. Insulation support from 5mm dia M.S. lugs shall be exactly same as in shell.

4.8 Horton Spheres

4.8.1 Standard shapes & Material

Shall be only Rockwool / Glass wool blanket.

4.8.2 Application

1 Structural members provided by spheres fabricator for insulation/cladding securement.

Insulation & Cladding supports shall be as per Standard 7-13-0015.

2 Insulation laying and securement

Insulation shall be applied between rings. Insulation shall be applied with joints tightly butted and laced together with 1mm dia galvanized lacing wire.

Insulation shall be secured by drawing and securing tightly 16 SWG stainless steel wire through the 6 dia holes, provided every 200 centres, in the horizontal leg of the insulation support angle ring. The wire shall be rightly drawn over the insulation and the insulation firmly secured. The wire shall be drawn through every single individual hole and it shall be secured with angle with a knot at every fourth hole. For application of bands for securement of insulation and cladding refer figure20.

4.9 Inspection Windows

4.9.1 Piping

Plug type inspection windows of ellipsoidal shape shall be provided on all the insulated pipelines having diameter 2" and above. One inspection window shall be provided at a distance of every 20meters of straight length of pipe. It should be provided at the bottom i.e. At 4-6-8 clock position whichever is convenient. There must be atleast one inspection window between two bends which are minimum 10 meters apart. Atleast 50% of the bends shall be provided with inspection windows. The sheet metal of the inspection windows shall be of same thickness as that of the sheet metal cladding on insulation. The size of the inspection windows shall be as follows:

Pipe dia 2"	35mm minor diameter x 120mm major diameter
Pipe dia 3"	45mm minor diameter x 120mm major diameter
Pipe dia 4"	75mm minor diameter x 120mm major diameter
Pipe dia 6"	100mm minor diameter x 120mm major diameter
Pipe dia 8"	100mm minor diameter x 120mm major diameter
Pipe dia > 8"	120mm minor diameter x 120mm major diameter

4.9.2 Exchangers

All the heads shall be provided with one inspection window each. Minimum two inspection windows shall be provided on the shell side.

4.9.3 Columns & Vessels

Heads shall be provided with one inspection window each. One inspection window shall be provided at every platform. Minimum two inspection windows shall be provided on shell portion.

4.9.4 Tanks

One inspection window shall be provided at each course of the tank and also at the top.

4.10 Impulse Lines

Wrap the impulse lines with insulation (Sodium Silicate inhibited Ceramic rope) of required thickness (refer note below) after cleaning the impulse lines of dust, rust, grease etc. Ensure that the rope(s) have been tightly wrapped without leaving any gaps. Apply two layers of self adhesive Aluminium foil tape of minimum 0.1 mm thick spirally bound over the fibre rope surface with the joints in two layers staggered. Ceramic rope shall have minimum density of 250 Kg/m^3 with other properties conforming to para 3.2.3(1) of the specification for Hot Insulation. A suitable sealant shall be provided to stop the water ingress at the termination points of insulation.

Note: Impulse line insulation details shall be as follows:

Size (Impulse line)	Temp	No. of Ins layers	Thickness of each layer
½"	150degC	2	½"
¾"	150degC	2	½"
½"	250degC	2	¾"
¾"	250degC	2	¾"

5.0 INSULATION FINISH

5.1 General

5.1.1 Moisture Barrier

1 On all surfaces except horton sphere, provided with fibrous materials, Moulded Expanded Perlite , Calcium silicate, Polyisocyanurate & Polyurethane foam .

For surfaces upto 125°C & on PIR/PUR in case of electric heat tracing apply a breathing type moisture barrier as below. A 3mm thick coating of mastic shall be applied to the surface of the insulation as soon as possible, after erection, to reduce the time the insulation is exposed to the weather, to a minimum. Whilst this coat is still wet, glass cloth shall be laid over the surface and embedded in the mastic. Care shall be taken to ensure that the glass cloth is laid smooth and free from wrinkles and that no pockets of air are trapped beneath the surface. At junctions in the glass cloth, the overlap shall not be less than 75mm. A second 3mm thick coat of mastic shall be applied after approximately 12 hrs. When dry this coating shall be a minimum of 1.50mm thick. Care must be taken, however, to ensure that the individual coats are not greater than 3mm (especially corners) otherwise some cracking of dried coat may result. The mastic shall not be applied over wet insulation or until the adhesive is dry. During the drying time, the insulation shall be protected from the weather by "Alkathene" film type tarpaulin or similar materials approved by Engineer-in-Charge. **Mastic vapour barrier quality shall be Ar-cryl CP-9 of Childers or equivalent.**

5.1.2 Insulation Finish

The insulation finish shall provide a weatherproofed and covering over the whole of the insulated areas and be applied and fitted in such a manner as to provide a close fitting assembly without gaps.

5.2 Piping (For All Materials)

5.2.1 Straight pipe shall have metal jacketing cut and machine rolled, (approx. 1metre long) wrapped around, with 50mm minimum overlaps on both longitudinal and circumferential overlaps. All laps shall be arranged to shed water.

5.2.2 A single bead shall be made on all overlaps to ensure tight metal to metal water tight arrangement. Selftapping screws, at every 150, shall be provided at all longitudinal overlaps for both horizontal & vertical piping.

5.2.3 At all operating temperatures the seams at overlap positions shall be rendered watertight per clause 3.4.5 to ensure that insulation remains dry and unwetted, whether the possible water impingement is from rain, hose or fire sprinklers.

5.2.4 The metal coverings shall be secured tightly around the insulated pipe and held in place with hands on a maximum of 300mm centres. One band shall be located on each circumferential lap and the distance between laps divided at equal band spacings. The band securing seals shall be kept neatly in line and positioned away from viewing angles as much as is possible.

5.2.5 Vertical overlaps on vertical or near vertical piping shall be staggered to provide overlaps at 'North,' and 'South' positions in alternate sections of covering.

5.2.6 Each sections of metal covering on vertical piping with insulation OD's larger than 250mm shall be supported from the next lower section with two 'S' clips, fabricated from banding material. The 'S' clip shall be of sufficient length to allow the minimum overlap of 50mm.

5.2.7 On vertical piping with OD's of 600mm and larger, the securing bands shall be supported by 'J' clips, fabricated from banding material. The 'J' clip spacing shall be a minimum of two per band. All 'J' clips shall be screwed into position and secured.

5.2.8 Insulated bends and elbows in piping 80mm and larger, shall be metalled with 'lobster back' segments using 10mm minimum ball swage to assist shaping. The metal bands shall be screwed with selftapping screws and metal sealants are to be provided to get a completely waterproofed arrangement.

5.2.9 Insulated bends and elbows in piping smaller than 80 mm may use complete pressed and humped back flat metal elbows or fabricated 'stove pipe' elbows.

5.2.10 The practice of locating all joints in the top portion of elevated horizontal pipes for the sake of good appearance when looking up from grade shall be strongly discouraged. The joints shall be located to shed water.

5.3 Equipments (For All Materials)

5.3.1 The metal jacket over vertical vessel shells shall be constructed of sheet metal panels with the weight of the panel taken on the equipment insulation support rings, via angle brackets bolted to the panel. Refer standard 7-12-0025 for details.

5.3.2 The panels shall be applied commencing at the bottom of the vessel. Each circumferential ring of panels shall be tensioned by means of tensioning bands until the final joint is screwed tight. 'S' clips shall be used as sheeting support at unscrewed circumferential overlaps.

5.3.3 The panels shall be held tight over the vessel insulation by means of circumferential bands and sealed per 3.4.5. The bands shall be positioned on all horizontal overlaps and at 450mm centres. Bands shall be held in their relative positions with 'J' clips and be machine-stretched and sealed to remove slack only. Those bands which are not supported by 'J' clips, shall be held in position on cladding by providing pop rivets every 2 metre centres.

5.3.4 The panels shall have a minimum overlap of one corrugation on vertical joints and 80mm on horizontal joints. The overlaps shall be arranged to shed water at all times.

5.3.5 The vertical and horizontal overlaps shall be secured with self tapping screws at 150mm pitch except the horizontal overlaps pre-selected to act as expansion joints, these shall be constructed with a 150mm overlap and shall remain unscrewed and left free to permit expansion. All overlaps shall be rendered watertight as per 3.4.5.

5.3.6 All equipment projections such as nozzles, shall have the jacketing sealed using a metal flashing, cut to fit the projection and extending above the jacket at least 80mm. The seal between the flashing and jacket shall be made watertight by use of self-tapping screws and sealing mastic.

5.3.7 Horizontal cylindrical equipment shall be furnished with flat metal jacket arranged in circumferential bands with the edge of the sheets, with the longer dimension applied around the circumference of the equipment insulation.

5.3.8 The panels shall have a minimum of 80mm overlap of both longitudinal and circumferential edges, both overlaps being finished with a simple ball swage and rendered watertight as detailed in clause 3.4.5.

5.3.9 Horizontal overlaps shall be secured with No. 8x12mm long self-tapping screws set in the overlap at 150mm intervals, and shall be so arranged that staggered bands of panelling encircle the equipment. Vertical overlaps shall not be screwed for horizontal equipment.

5.3.10 The metal finish shall be banded and sealed at 450mm centres.

5.3.11 The insulated heads of vertical and horizontal equipment shall be fabricated from flat metal, an "Orange peel" construction with all radial seams overlapping aminimum of 50mm and secured with self-tapping screws at 150mm centres. All overlaps shall be ball swaged and be rendered water tight per 3.4.5.

5.3.12 Projections from the heads shall be sealed using metal flashings, neatly cut to fit around the projections and extending above the jacket for a minimum of 80mm. The seal between flashing and jacket shall be weatherproofed with self-tapping screws and mastics.

5.3.13 Insulation at bottom heads of fully skirted equipments does not require weatherproofing.

5.3.14 Heads of equipments 24" OD and smaller shall be finished and waterproofed with square ended fabricated covers.

5.4 Vertical Storage Tanks

5.4.1 **Cladding Applications and Securement**

1 Shell (Fig. 19 and Standard 7-13-0003. Sh.1 and 2 of 2)

Cladding is applied over the system of horizontal rings as follows :

- Overlaps in the vertical joints will be one corrugation.
- Overlaps in the horizontal joints shall be 50mm (min.).
- Cladding to cladding fastening, at both horizontal and vertical overlaps shall be alternately by "POP" Rivets & selftapping screws at 150mm pitch.
- Cladding shall be secured to support ring by bolting. Bolts are provided by tank fabricator at 300mm centres on angles provided at every 1175 centres vertically. Cladding is secured as indicated in standard 7-13-0003. Felt washer, aluminium washer and nut shall be supplied by insulation contractor for all bolted connections at shell, roof and curb angle.
- Insulation shall be tucked into the skirt portion of the curb angle. Shell cladding and extended roof cladding shall be secured to curb angle by bolting as per standard 7-13-0003, every 1500.

- Horizontal stainless steel bands over-cladding to be provided every 800mm and also to coincide at every horizontal cladding overlaps. Bands shall be tightened, locked and lock fastened featuring stainless steel fastening systems. In order to prevent sliding of the bands downwards, the bands shall be secured to the cladding using POP rivets at horizontal pitch not over 2 metres .

2 Roof

- All cladding joints shall be sealed by elastomeric metal sealants.

- Min. 75mm overlap shall be ensured at all joints.

- At all joints, cladding-to-cladding securement shall be provided by self tapping screws and pop rivets alternately, every 150 centres.

- Cladding shall be secured by bolting at every 300 provided by tank fabricator. For details of cladding arrangement and bolting, see standard 7-13-0003.

5.5 Horton Sphere

5.5.1 Cladding Support

Insulation contractor shall provide 25mm x 0.8mm S.S. Bands over insulation and install them longitudinally from top to bottom of the sphere in such numbers so as to afford a maximum spacing of 1175mm at the equator. The S.S. Bands are spanned between four floating rings, the one at the top and bottom of the sphere are provided by the sphere fabricator. Generally the other two rings and SS bands are provided after insulation is applied prior to application of cladding. Floating rings will be constructed of 10mm diameter rods of S.S.. Diameter of ring at the top and bottom, to be provided by sphere fabricator would be around 1.2m. Cladding support bands shall be tightened using mechanical tightners and fastened to MS / AS angles using two S.S.Rivets or four Nos. of Aluminium POP rivets, per angle cleat.

5.5.2 Cladding Application

While applying cladding, following shall be ensured

-Minimum overlap both horizontal and vertical shall be 50mm.

5.5.3 Cladding Securement and Sealing of Joints

All joints to be sealed using elastomeric metal sealant.

Cladding to cladding securement of both vertical and horizontal overlaps shall be alternately by POP rivets and self-tapping screws, at every 150mm spacing.

Cladding shall be secured to the insulation angle support by bolting the cladding on the bolts provided at every 300 pitch at every angle support per standard 7-13-0015. Mmill-board washer, aluminium washer and nut shall be supplied by insulation contractor.

Further cladding shall be secured by 25mm x 0.5mm S.S. bands, applied identical to those for insulation securement. The bands shall be provided between two floating rings, one at the top and one at the bottom and arrangement & details shall be identical to that of insulation securement. Bands shall be secured to cladding every 2M by one SS or two aluminium POP rivets. While providing floating rings, for both insulation and cladding securement, following points shall be taken care of:

-Floating rings shall clear nozzles / manholes etc.

-Exercise extreme care while installing floating rings regarding cut outs in cladding around projections,

-Cladding at interface between leg and the body of the sphere to be provided with care and suitably sealed to prevent water ingress.

6.0 GAURANTEE & TEST CERTIFICATES

Insulation contractor shall guarantee all insulation works against the defects due to material and workmanship effecting performance for a period of eighteen months from the date of completion of total insulation works and shall repair /replace promptly, without cost, any part or parts of the material that fails within said period.

All the test certificates required as per this document shall also be furnished alongwith the supply of materials.

7.0 REFERENCE CODES AND STANDARDS

The following list includes standards and specifications referenced in Spec. 6-44-0002 :

ASTM Standards and Specifications

ASTM A167	Specification for stainless and heat-resisting chromium nickel steel plate, sheet and strip
ASTM A240	Specification for heat-resisting chromium and chromium-nickel stainless steel plate, sheet and strip for Pressure Vessels
ASTM A463	Specification for steel sheet, aluminum coated, by hot-dip process
ASTM A526	Specification of steel sheet, zinc coated (galvanized) by the hot-dip process, commercial quality
ASTM B209	Aluminum - Alloy sheet and plate
ASTM C165	Measuring Compressive properties of thermal insulations
ASTM C177	Standard test method for Steady-state heat flux measurements & thermal transmission properties by means of the 'guarded-hot-plate' apparatus
ASTM C240	Standard test methods of testing Cellular glass insulation block
ASTM C302	Standard test method for Density and dimensions of preformed pipe-covering-type thermal insulation
ASTM C303	Standard test method for Density and dimensions of preformed block and board type thermal insulation
ASTM C335	Standard test method for Steady-state heat transfer properties of horizontal pipe insulation
ASTM C356	Standard test method for Linear shrinkage of preformed high-temperature thermal insulation subjected to soaking heat
ASTM C390	Standard criteria for Sampling and acceptance of preformed thermal insulation lots
ASTM C446	Standard test method for Breaking load and calculated modulus of rupture of preformed insulation of pipes
ASTM C518	Standard test method for Steady-state thermal transmission properties by means of the heat flow meter apparatus
ASTM C533	Standard specification for Calcium silicate block and pipe thermal insulation
ASTM C547	Standard specification for Mineral fiber pipe insulation
ASTM C552	Standard specification for Cellular glass thermal insulation
ASTM C591	Standard specification for Unfaced preformed rigid cellular polyisocyanurate thermal insulation
ASTM C592	Standard specification for Mineral fiber blanket insulation and blanket-type pipe insulation (metal-mesh covered) (industrial type)

ASTM C610	Standard specification for block and pipe thermal insulation
ASTM C612	Standard specification for Mineral fiber block and board thermal insulation
ASTM C795	Standard specification for thermal insulation for use in contact with austenitic stainless steel
ASTM C871	Standard test methods for Chemical analysis of thermal insulation materials for leachable chloride, fluoride, silicate and sodium ions
ASTM C892	Standard specification for High temperature fiber blanket thermal insulation
ASTM D1622	Test method for apparent density of rigid cellular plastics
ASTM D2126	Test method for response of rigid cellular plastics to thermal and humid aging
ASTM E96	Standard test methods for Water vapor transmission of materials

BS Standards and Specifications

BS 1902 Prt 6	Ceramic fibre products
BS 2972	Method of test for Inorganic thermal insulating materials
BS 4370 Prt 2	Method of test for rigid cellular materials
BS 5608	Specification for preformed rigid polyurethane (PUR) and polyisocyanurate (PIR) foams for thermal insulation of pipework and equipments

IS Standards and Specifications

IS 10085	Method for chemical analysis of zircon flour or sand
IS 11239	Method of test for Rigid cellular thermal insulation materials
IS 12436	Specification for Preformed rigid Polyurethane (PUR) and Polyisocyanurate (PIR) foams of thermal insulation
IS 1335	Method of direct determination of alumina in refractory material
IS 1527	Methods for Chemical analysis of high silica refractory materials
IS 277	Specification for Galvanized steel sheets
IS 3346	Method for determination of Thermal conductivity of thermal insulation materials
IS 737	Specification for wrought aluminum and aluminum alloy sheet and strip for general engineering purposes
IS 8183	Bonded mineral wool-Specification
IS 9428	Calcium silicate insulation blocks and pipe-coverings
IS 9842	Preformed fibrous pipe insulation- Specification

Company Standards

7-13-0003	Hot insulation supports for storage tanks
7-13-0015	Hot insulation supports for spheres
7-12-0025	Fire proofing and insulation supports
7-13-0033	Hot insulation supports for horizontal vessels
7544-02-41-GL-56	Hot insulation supports for storage tanks

F

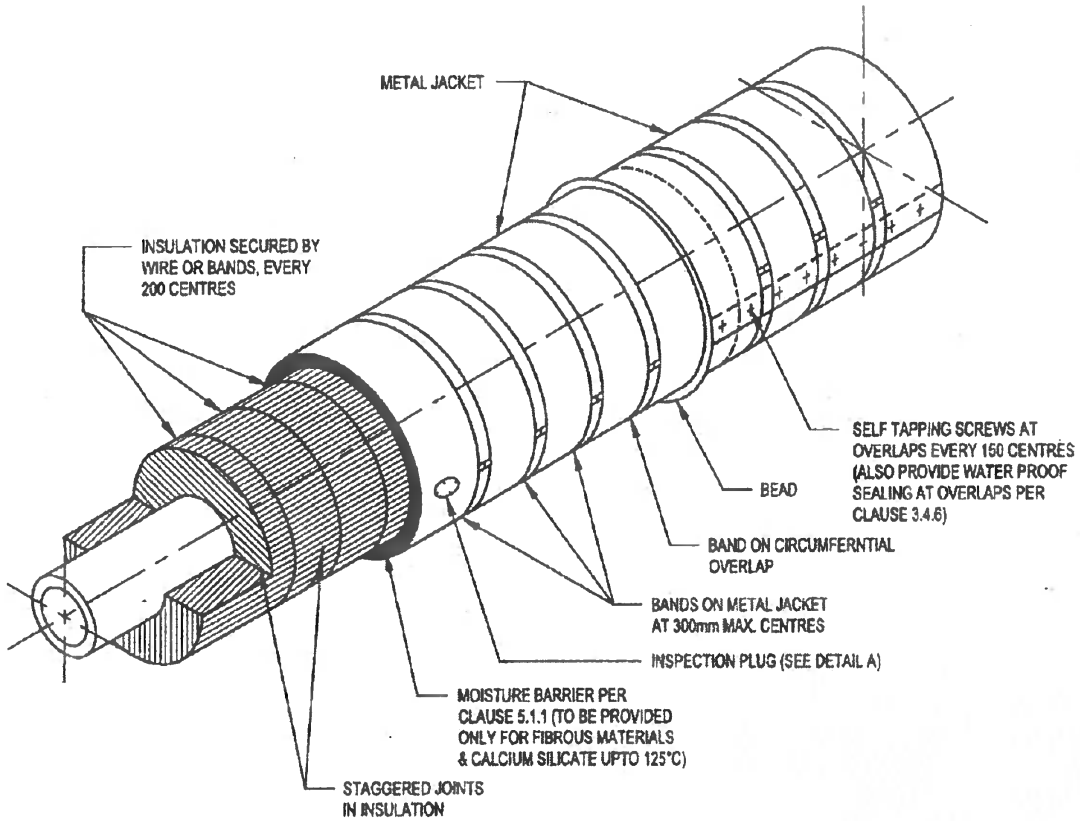

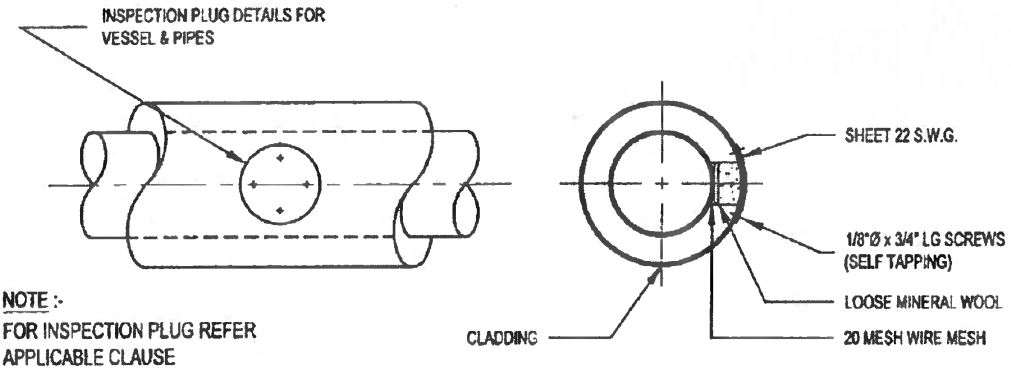

NOTE :-
FOR INSPECTION PLUG REFER APPLICABLE CLAUSE

DETAIL 'A'

FIGURE – 01
PIPE INSULATION DETAILS
(FIBROUS &RIGID INSULATION)

F

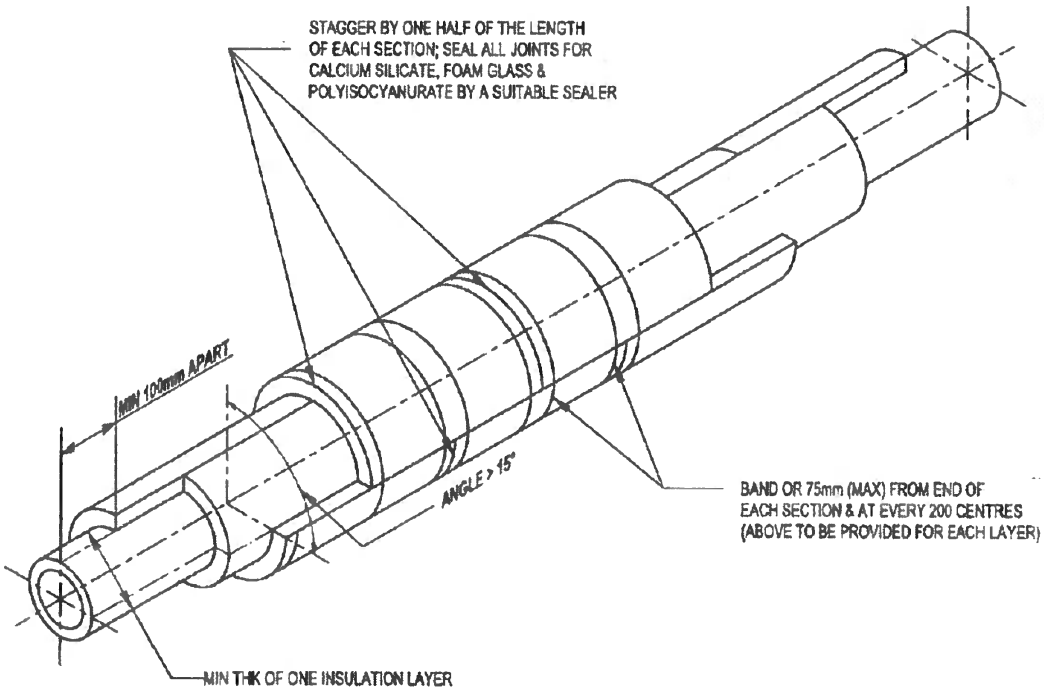

FIGURE – 02
PIPE INSULATION METHOD OF STAGGERING OF SECTIONS
RIGID & FIBROUS INSULATION (PREFORMED PIPE SECTIONS ONLY)

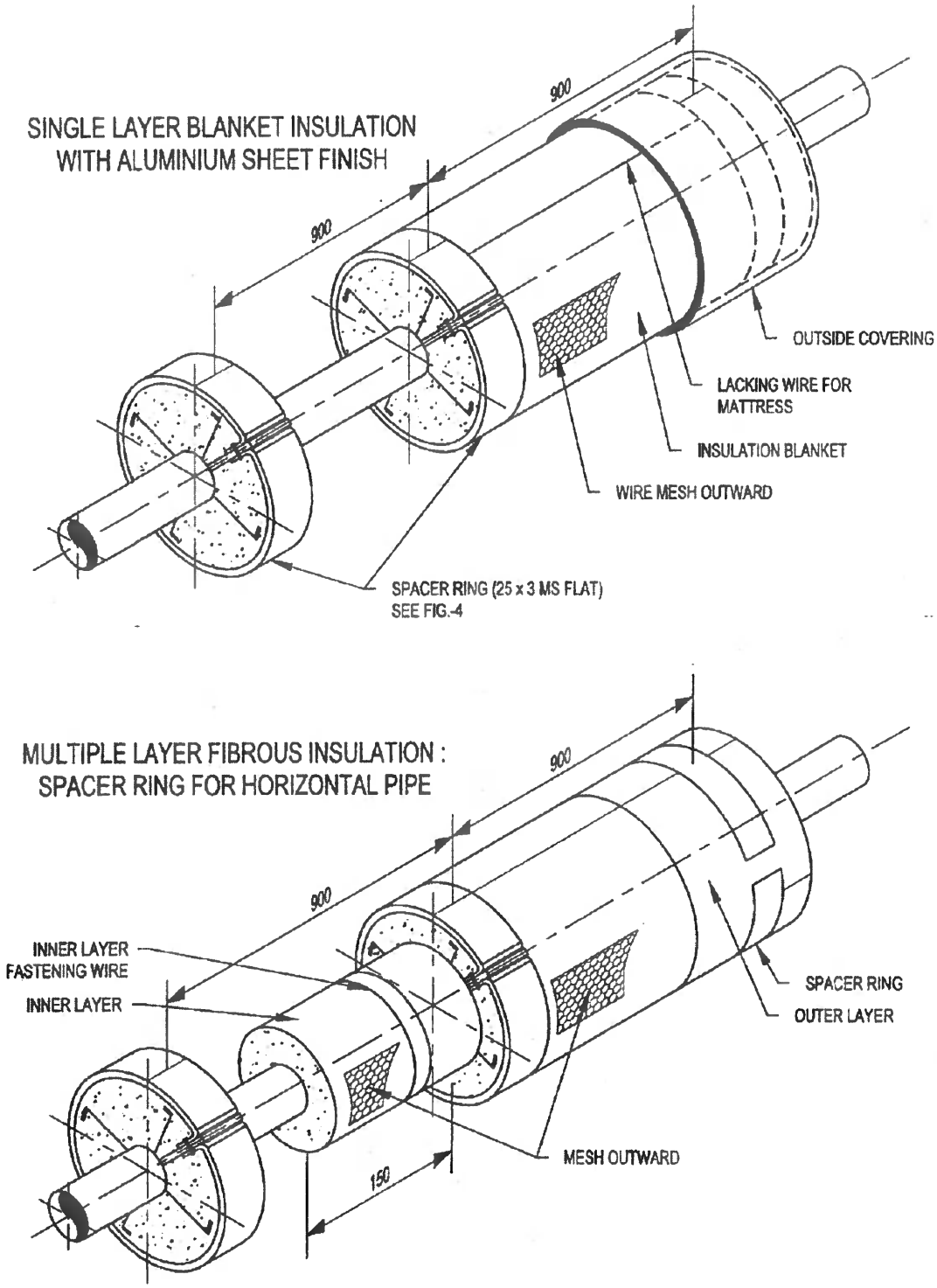

FIGURE – 03
HORIZONTAL PIPE : FIBROUS INSULATION; DETAIL OF SPACER RINGS FOR CLADDING SUPPORT

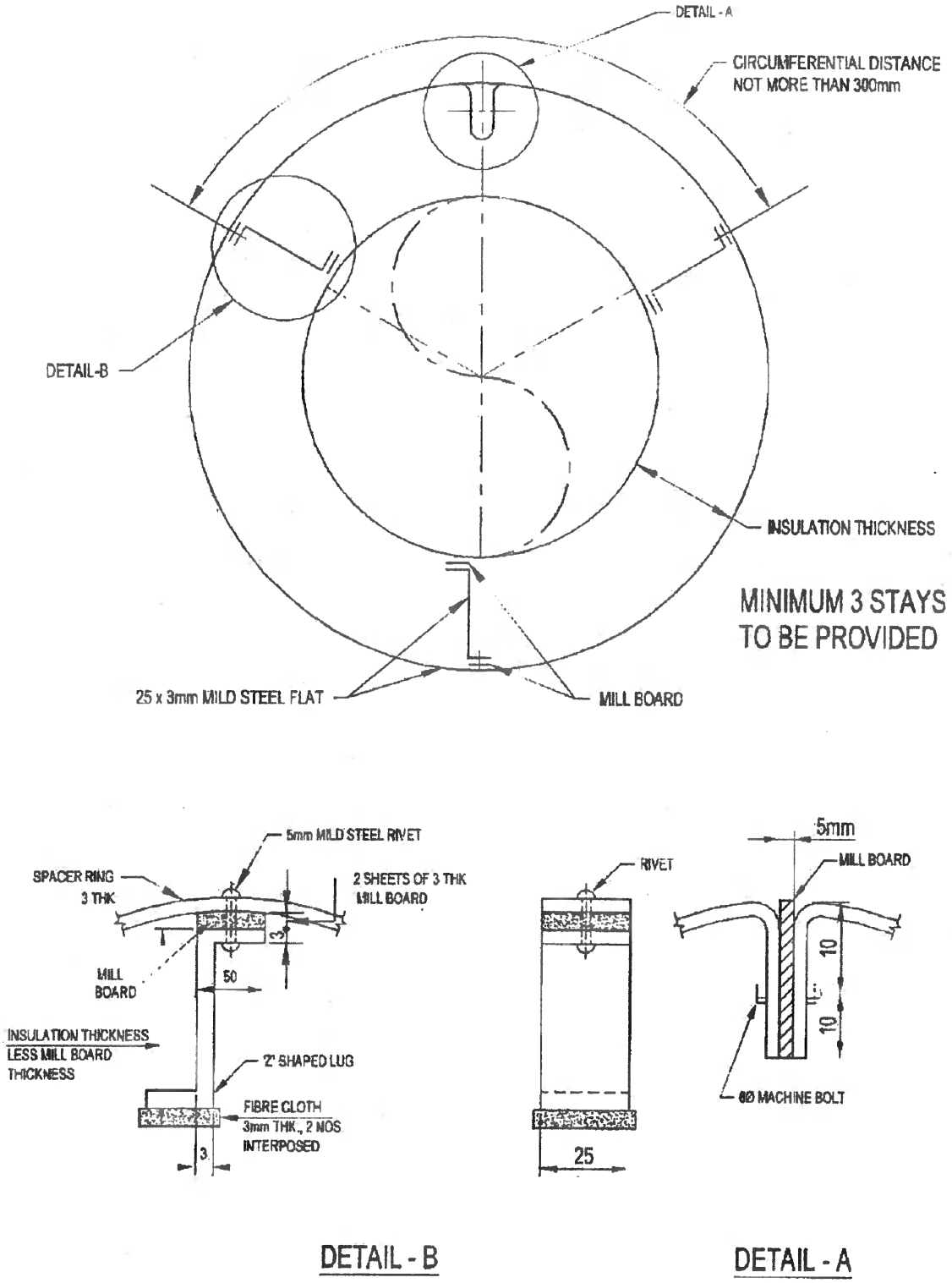

FIGURE – 04
DETAIL OF SPACER RING FIBROUS INSLUATION (MATTRESS)

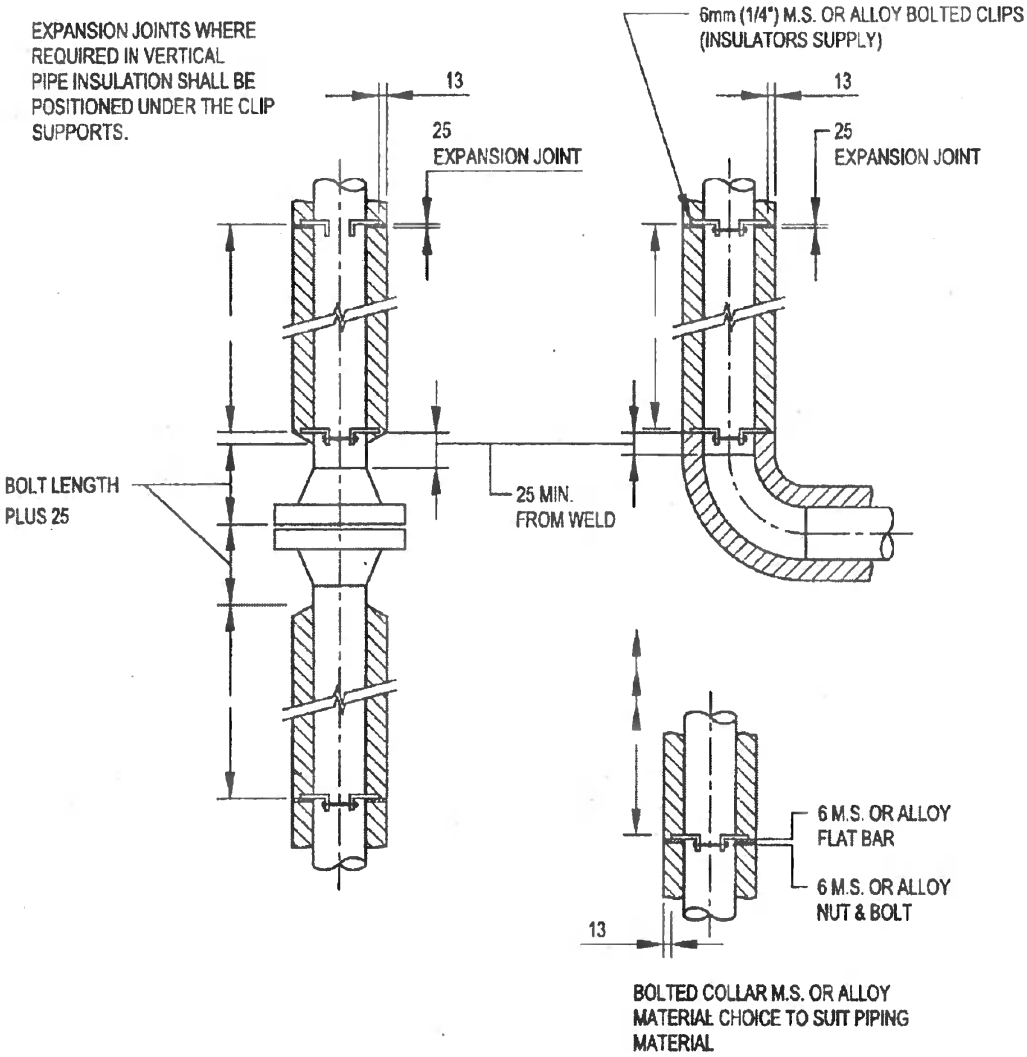

CLIP SPACING

PIPE TEMP. °C		MAX. SPACING 'D' MM	
UPTO 400		4500	
400 TO 500		3500	
500 TO 550		2500	

* CIRCUMFERENTIAL EXPANSION SHALL BE CONSIDERED AT THESE OPERATING TEMPERATURES.

FIGURE – 05
BOLTED ON INSULATION SUPPORT FOR VERTICAL PIPE

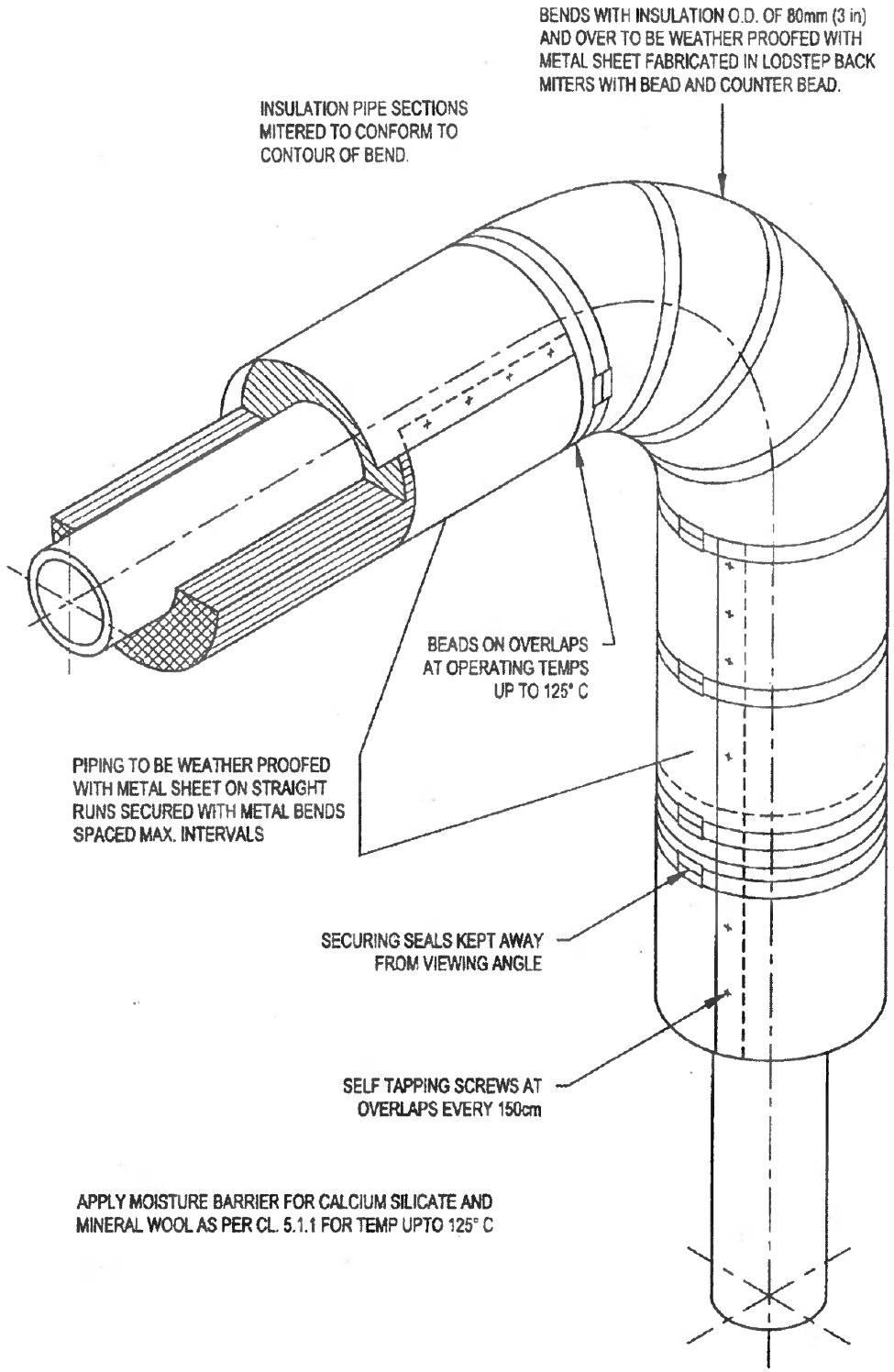

FIGURE – 06
INSULATION DETAILS FOR BENDS / ELBOWS

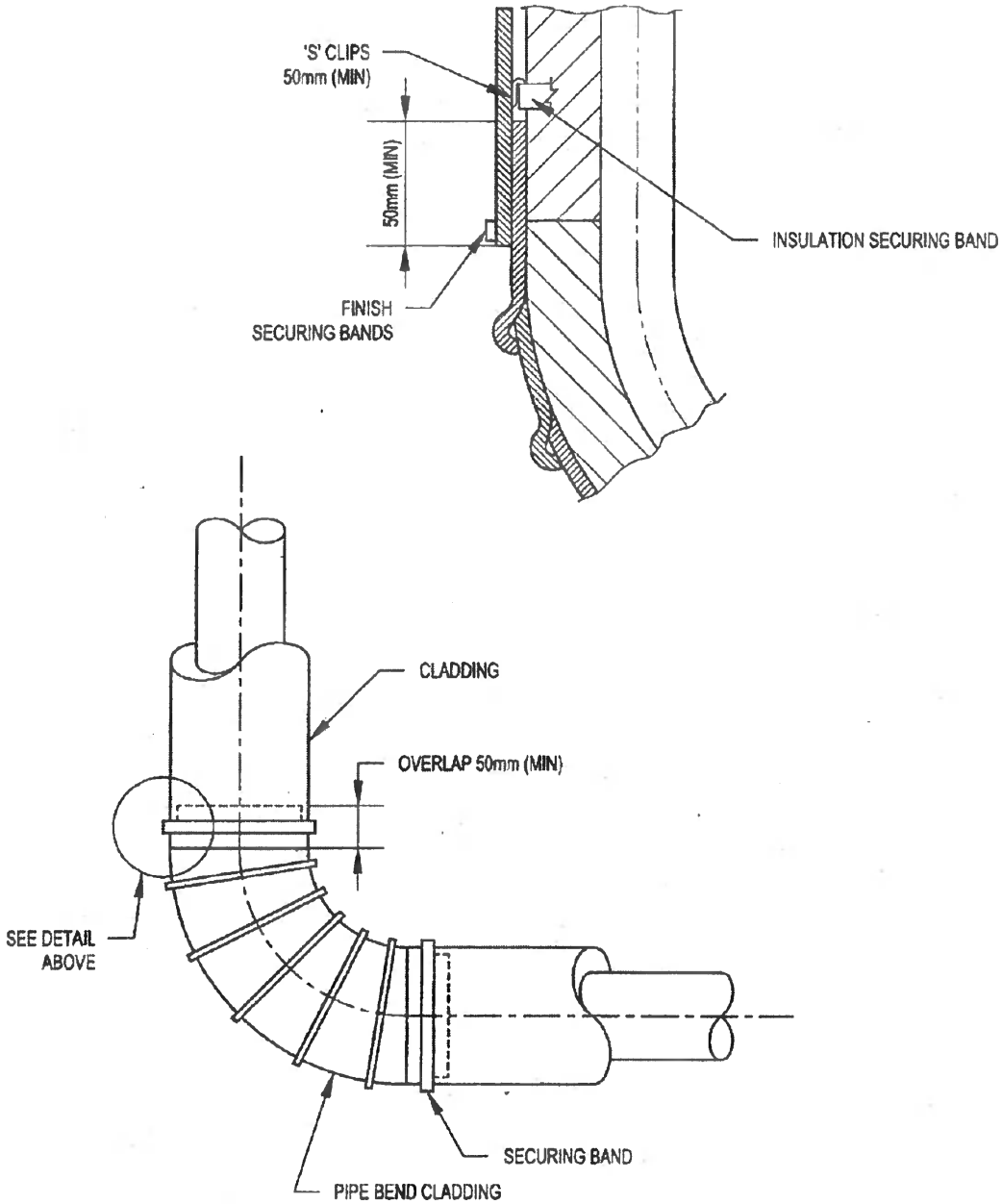

FIGURE – 07
INSULATION DETAILS : PIPE BENDS & ELBOWS

P

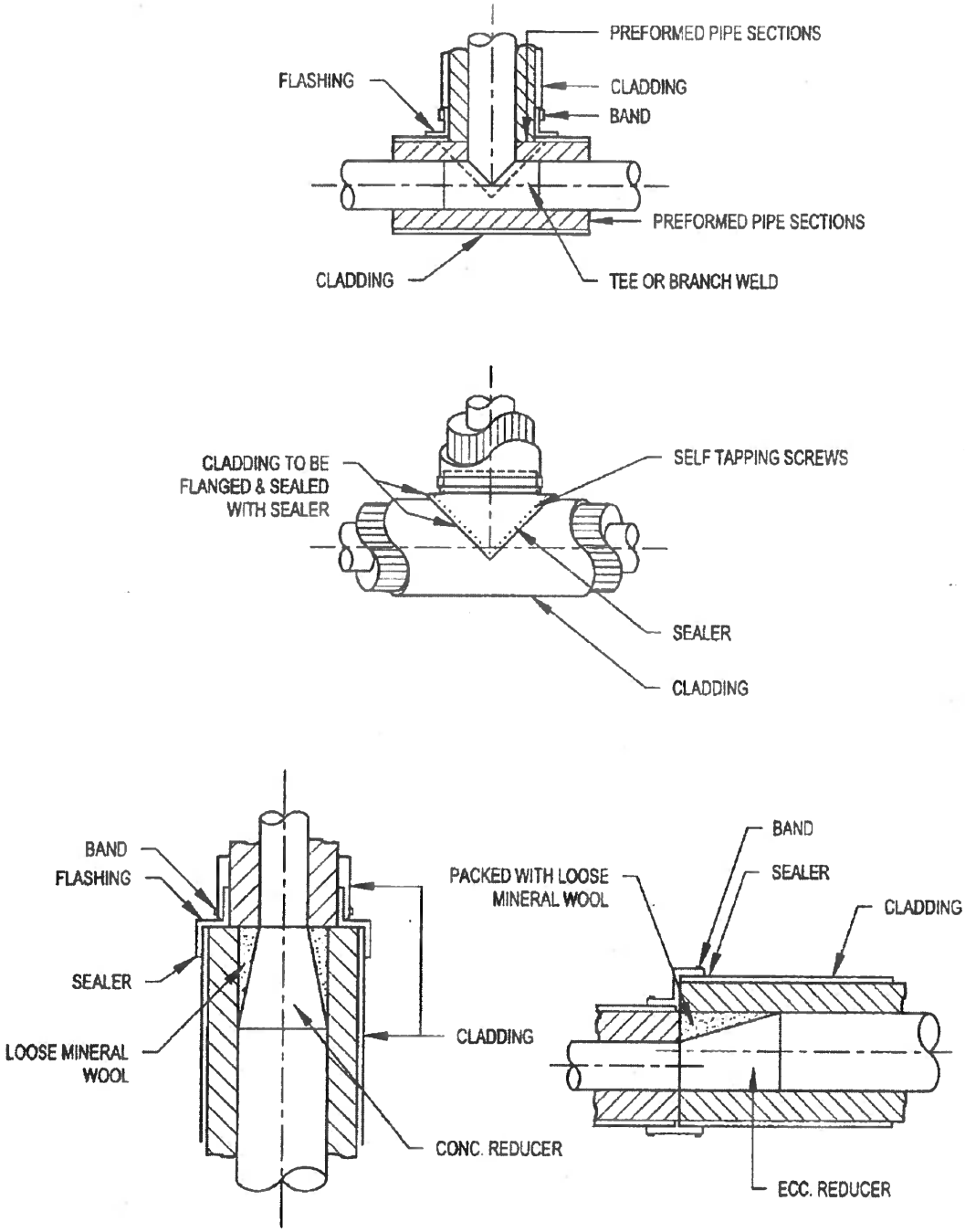

FIGURE – 08
INSULATION DETAILS: PIPE BRANCHED & REDUCER

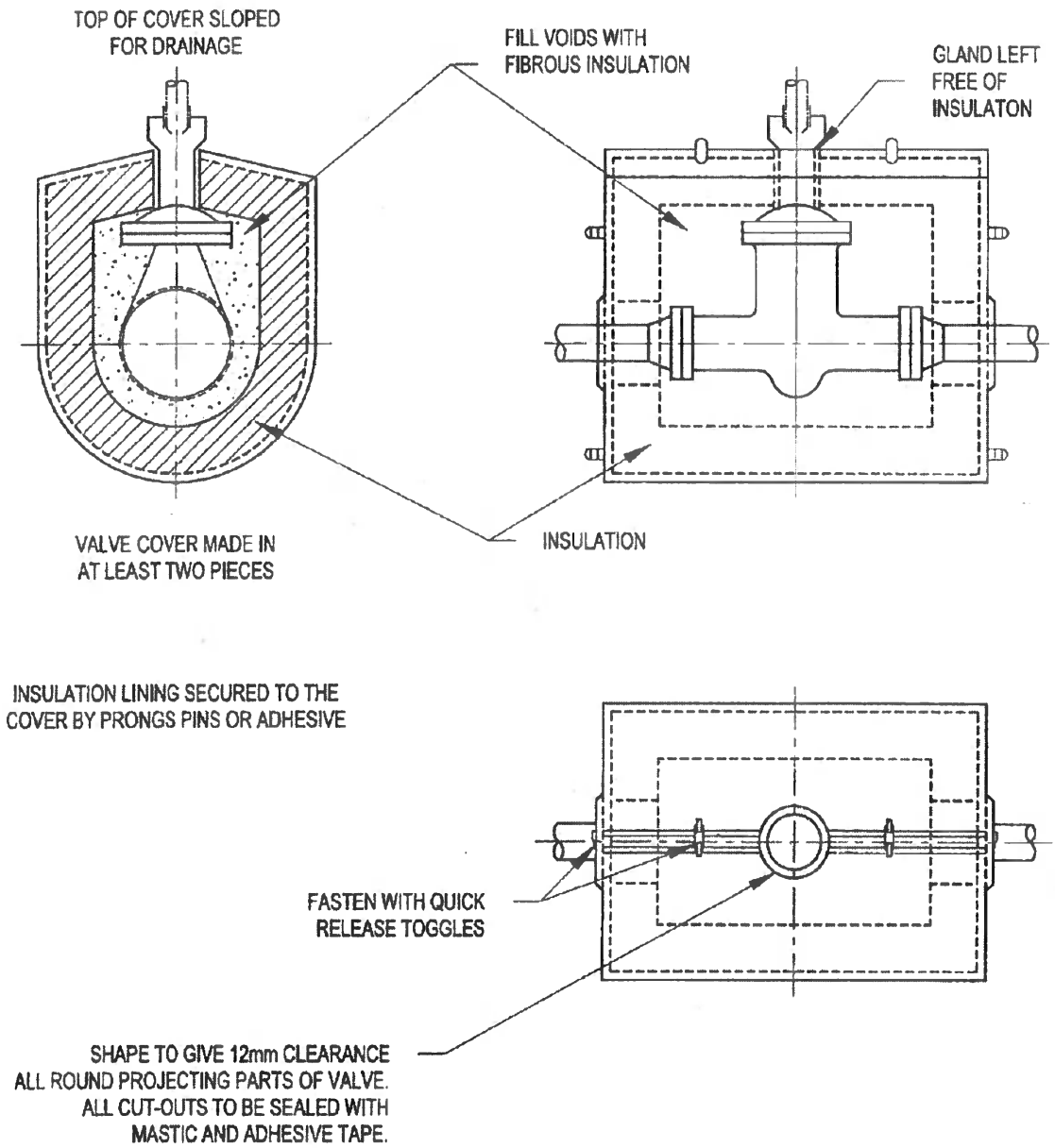

FIGURE – 09
INSULATED REMOVABLE COVER: VALVES

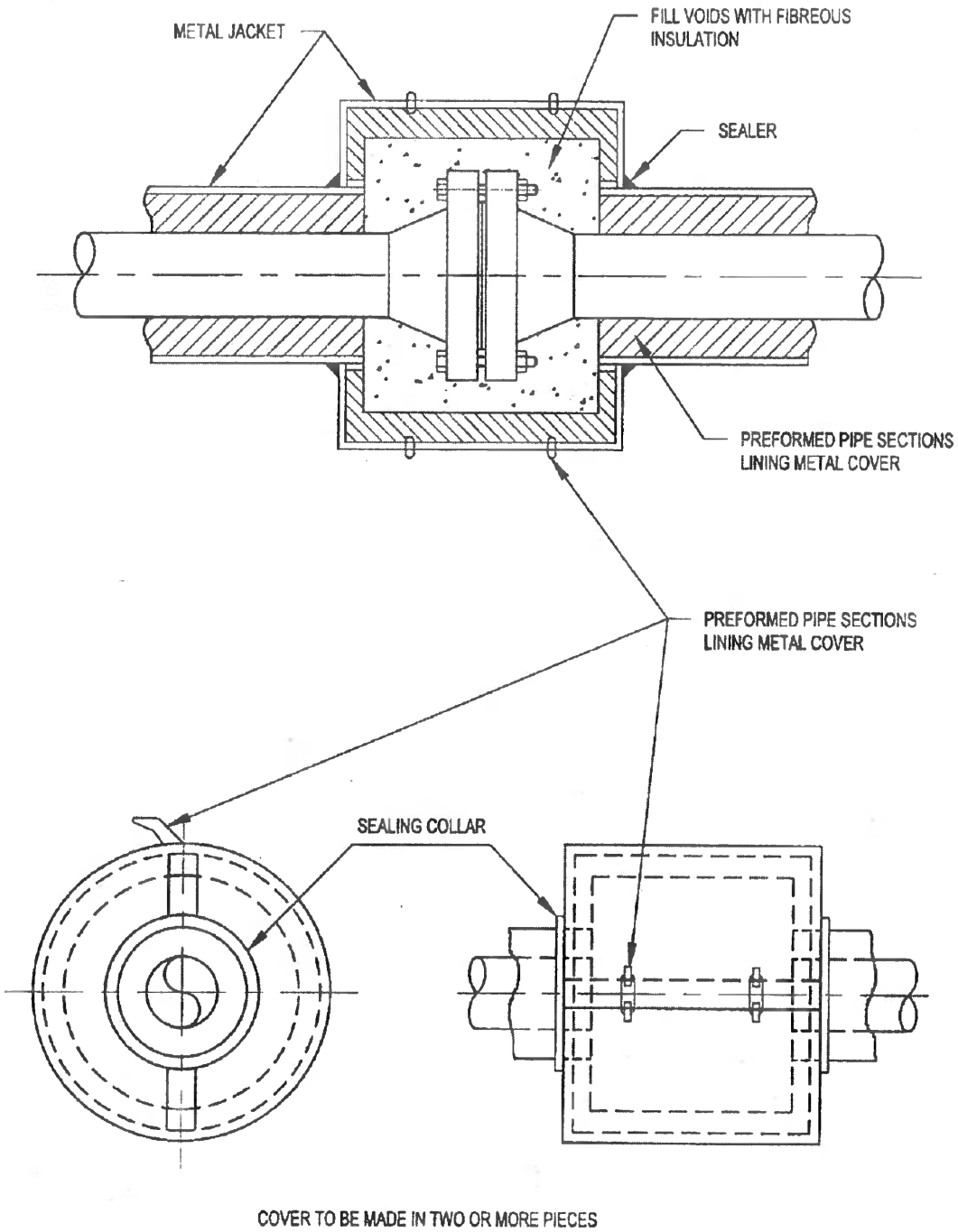

FIGURE – 10
INSULATION REMOVABLE COVER – FLANGED JOINTS

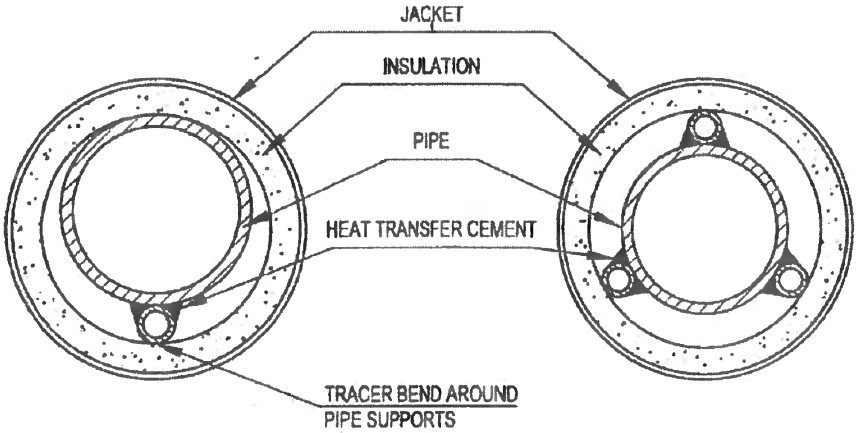

INSULATION FOR
SINGLE TRACER

INSULATION FOR TWO OR MORE
TRACERS EQUALLY SPACED

FIGURE – 12
INSULATION OF STEAM TRACED PIPING

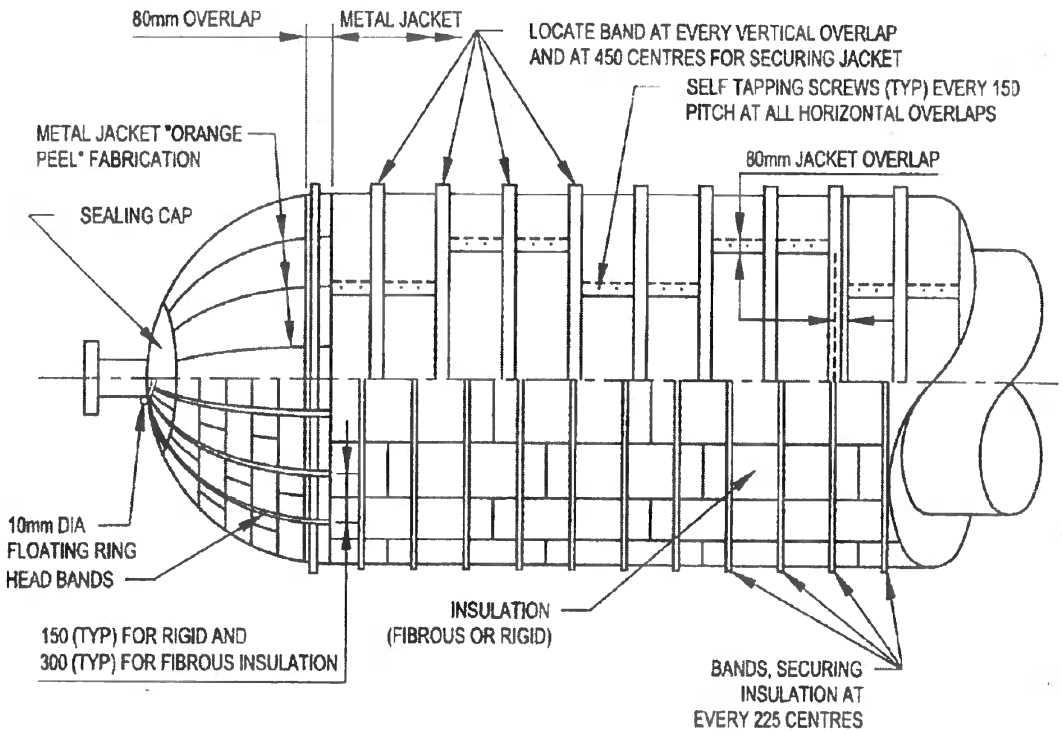

NOTES :-

1. SADDLE SUPPORTS FOR HORIZONTAL EQUIPMENT TOGETHER WITH SHOE AND ANCHOR SUPPORTS FOR HORIZONTAL PIPNG SHALL BE DESIGNED TO INCLUDE ELONGATED CUT-OUTS IN THE SUPPORT AT SUCH A DISTANCE FROM THE SUPPORTED EQUIPMENT AND PIPING TO ALLOW THE PASSAGE OF INSULATION SECURING BANDS AND TIES AROUND THE OUTSIDE FACE OF THE INSULATING AND FINISHING MATERIAL.

2. APPLY MOISTURE BARRIER FOR CALCIUM SILICATE AND MINERAL WOOL PER CLAUSE 5.1.1 FOR TEMPERATURES UPTO 125°C.

FIGURE – 13
HORIZONTAL EQUIPMENT INSULATION

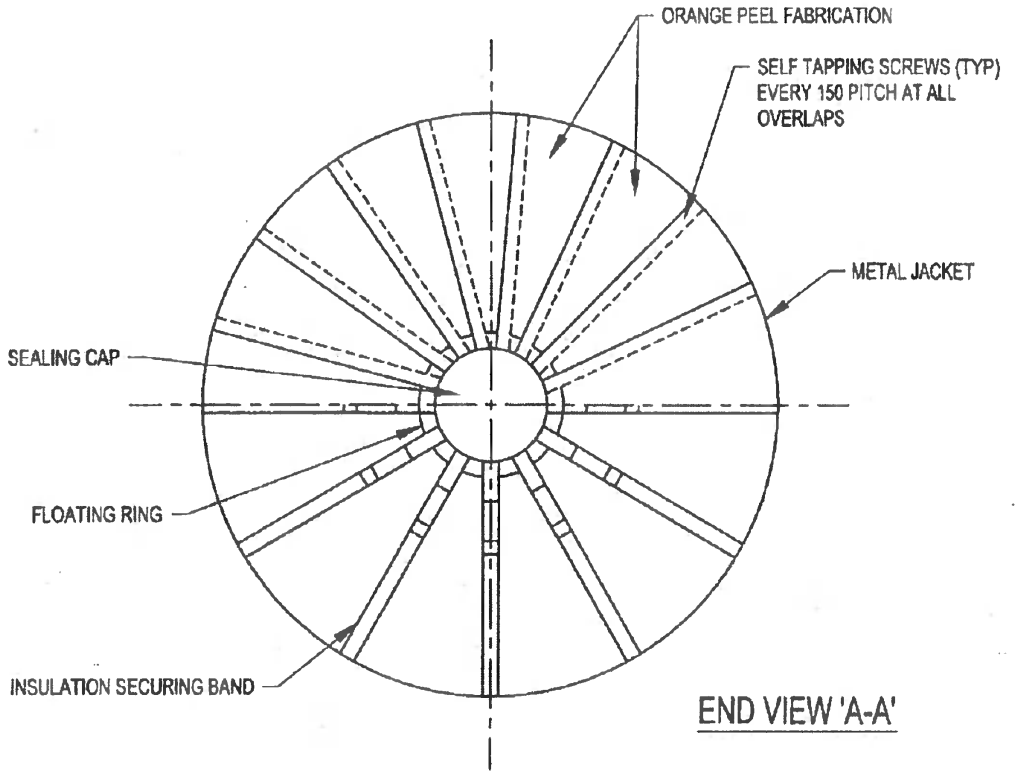

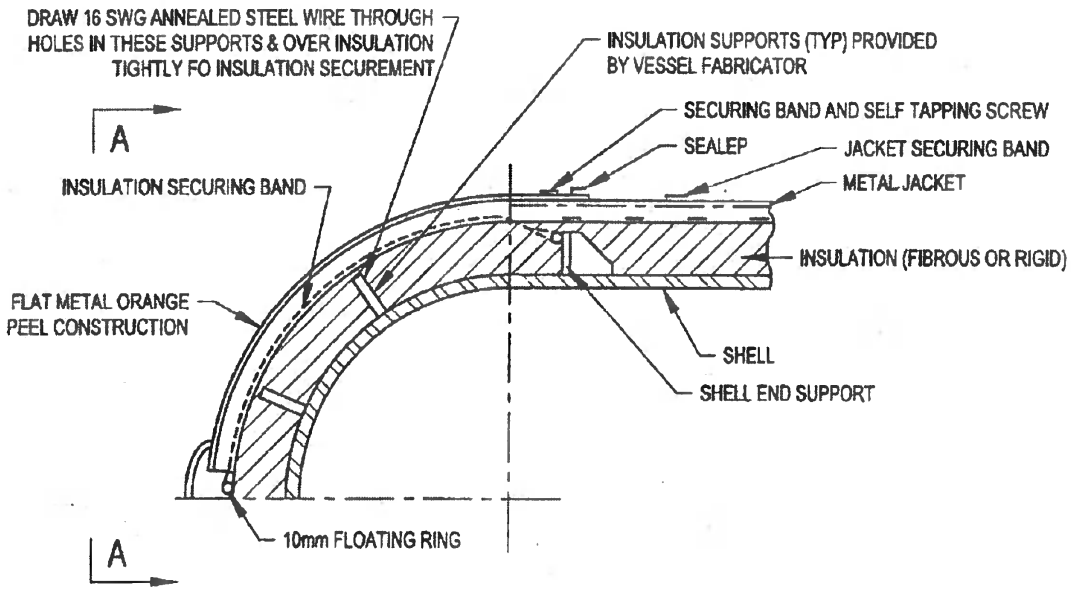

FIGURE – 14
HORIZONTAL EQUIPMENT HEADS

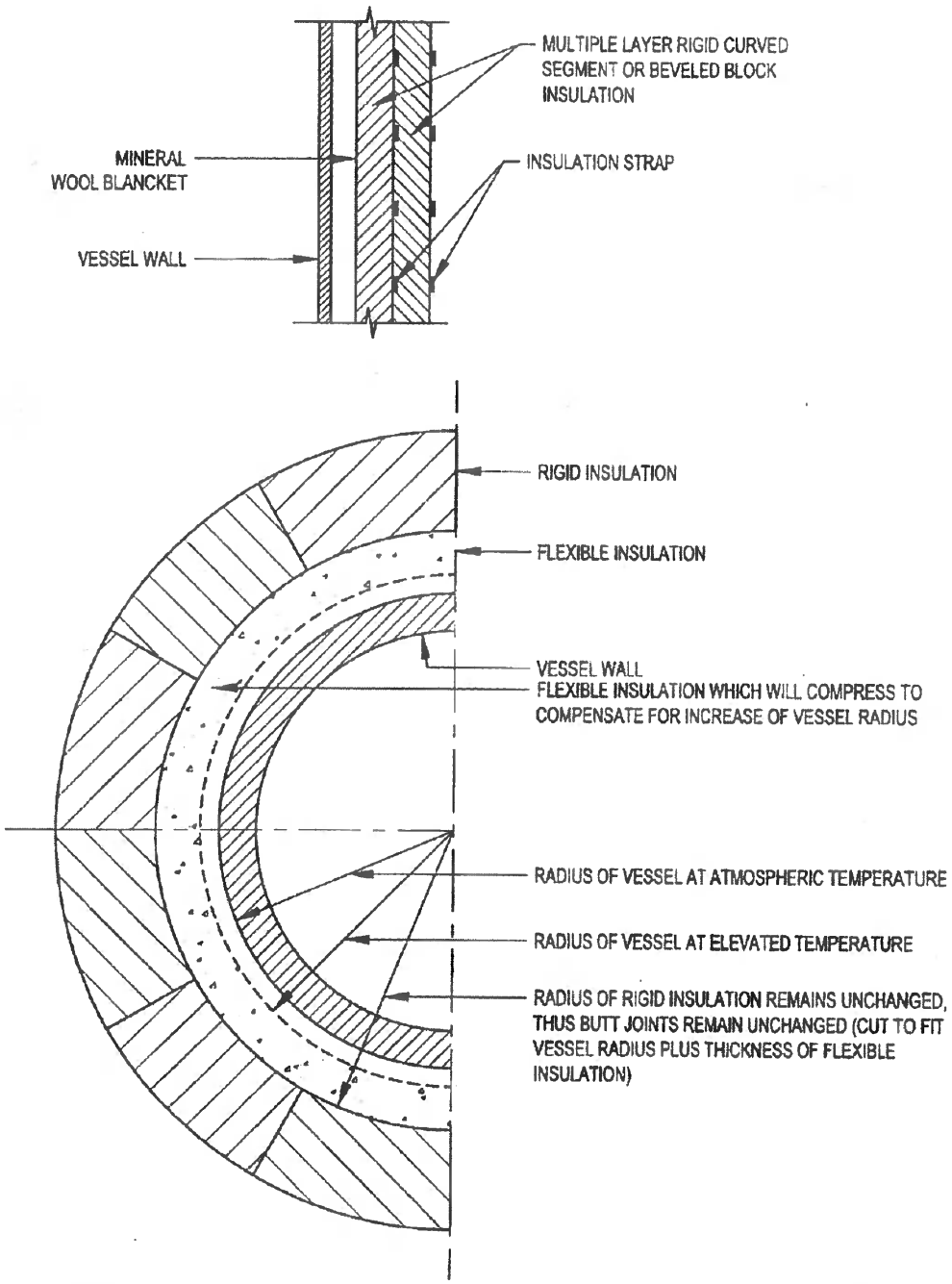

FIGURE – 15
USE OF FLEXIBLE INSULATION IN COMBINATION WITH RIGID INSULATION TO COMPENSATE FOR VESSEL EXPANSION

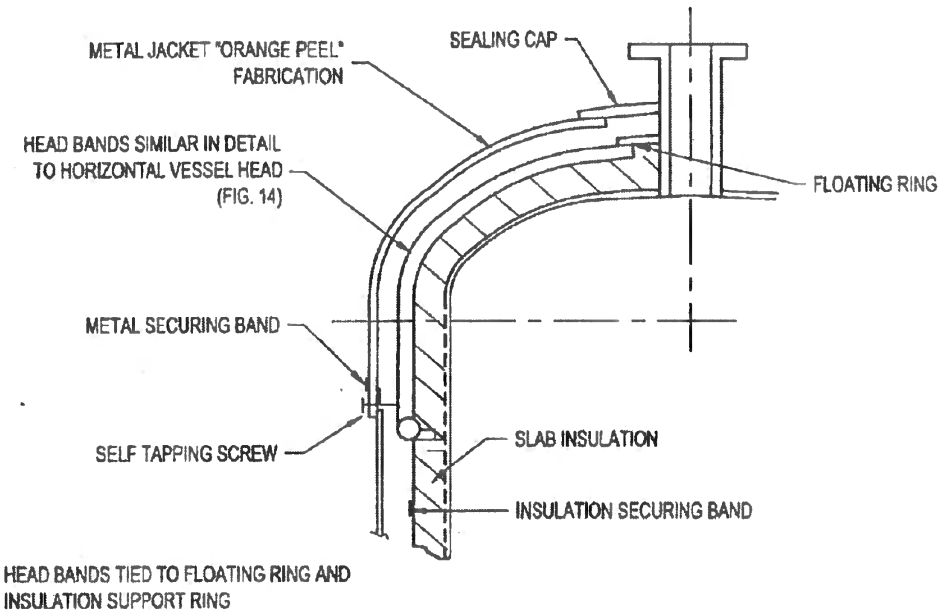

DETAIL 'A'

FIGURE – 17
INSULATION DETAILS VERTICAL VESSEL HEADS

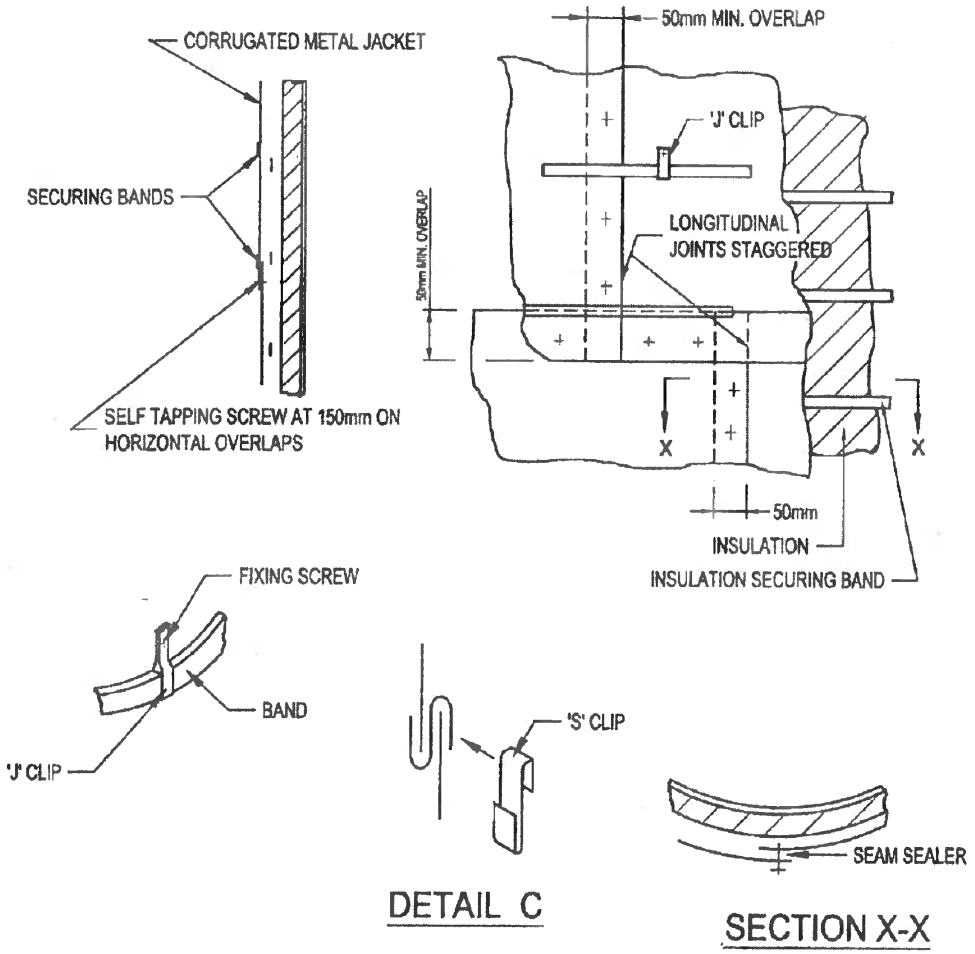

NOTE:

FINISHING SHEETING TO BE BANDED AND SCREWED. HORIZONTAL OVERLAPS LEFT UNSCREWED FOR EXPANSION PURPOSES SHALL BE SECURED AND SUPPORTED WITH 'S' CLIPS.

FIGURE – 18
INSULATION DETAILS : VERTICAL VESSELS

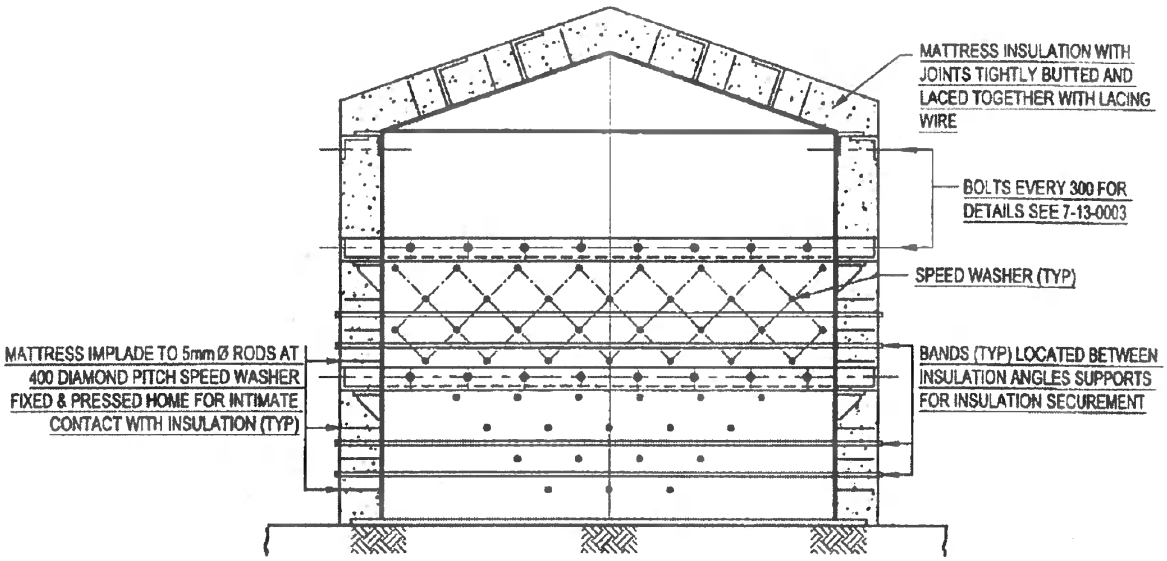

INSULATION SECUREMENT DETAIL

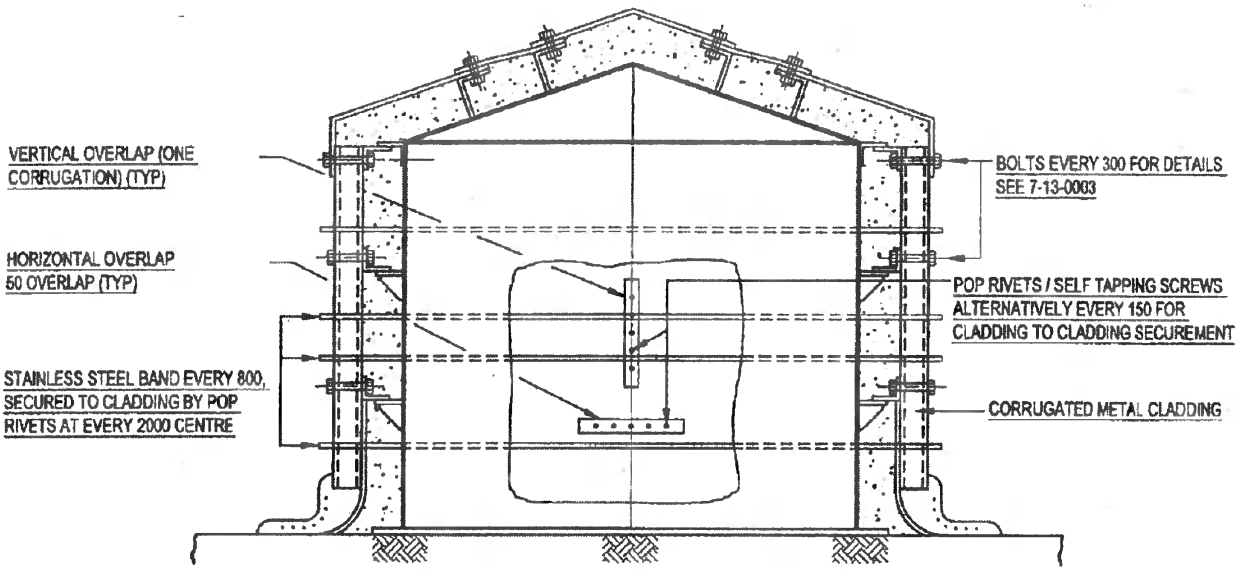

CLADDING SECUREMENT DETAIL

NOTE :- PROVIDE MASTIC MOISTURE BARRIER ON SHELL & ROOF INSULATION, PER CLAUSE 5.1.1 BEFORE APPLYING CLADDING

FIGURE – 19
INSULATION DETAILS : VERTICAL STORAGE TANK

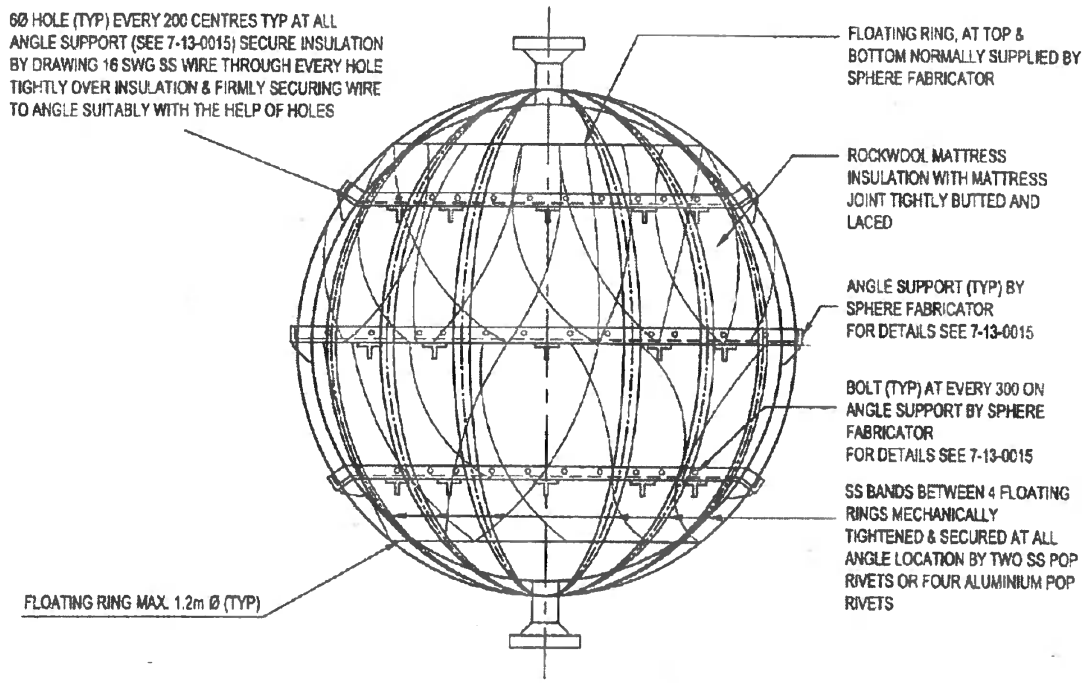

INSULATION SECUREMENT DETAILS

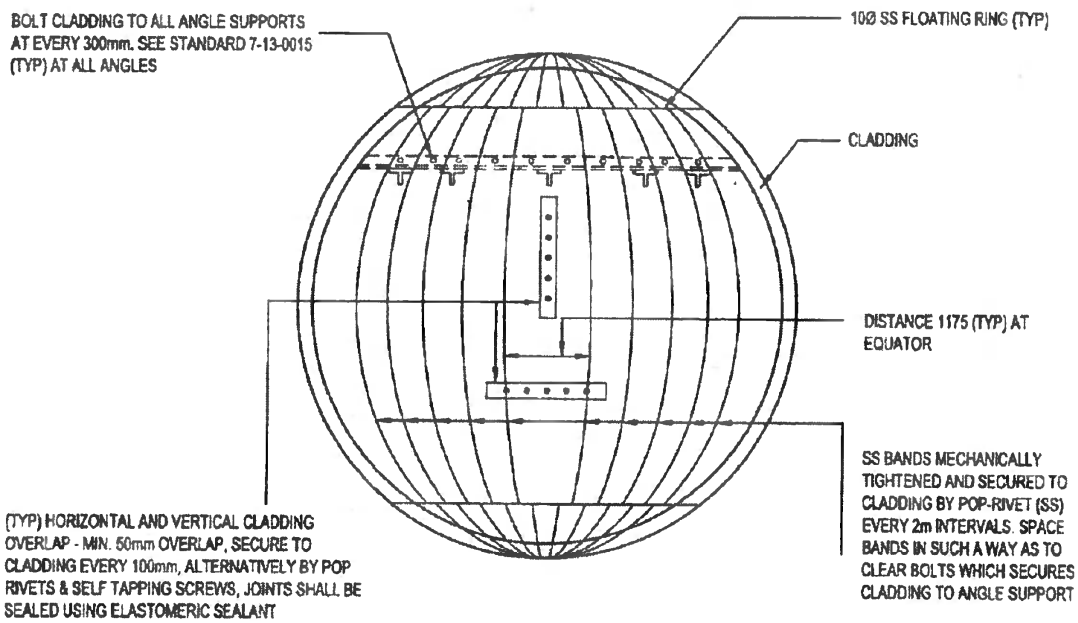

CLADDING SECUREMENT DETAILS

FIGURE – 20
INSULATION DETAILS : SPHERE

COLD INSULATION

1.0 SCOPE

This specification covers technical requirements and procedure for the application of self extinguishing type insulation PUF/PIR and Mineral Wool to vessels, equipments, heat exchangers, pumps, piping and instruments, in temperature range of (+)120°C to (-)110°C.

2.0 GENERAL REQUIREMENTS

2.1 Insulation shall be provided on all vessels, equipments, heat exchangers, piping and instruments etc. containing fluids or vapour, for which it is necessary to :

a. Maintain low temperature for process control.
b. Avoid surface condensation.

2.2 All applications of insulation shall be made in accordance with this specification. Contractor shall submit with his proposal, information on intended practices of insulation application, which are not covered in this specification, for approval of the Engineer-in-Charge. This information shall include all the details and sketches including those for the following :

a. Removable insulation housings;
b. Flashing details;
c. Additional Insulation supports;
d. Vessel head insulation supports;
e. Expansion joints;
f. Vessel insulation details;
g. Exchanger removable housings;
h. Machinery removable housings etc.

2.3 Protection of Materials During Storage

Insulation materials must be protected against any damage, from delivery to finish cladding. Decking and covering with tarpaulins alone are not considered sufficient protection from weather for any length of time and shall not be permitted. Insulation material slabs and sections shall be stored on a flat surface in a horizontal position. Insulation material shall never be stacked directly on the ground. The contractor shall provide covered storage for insulation materials as directed by the Engineer-in-Charge.

2.4 Protection of Partially Completed Jobs

All precautions shall be taken to ensure that each day's work is vapour sealed and cladded during erection and before being left over-night to prevent seepage of water into the materials and getting trapped. The system shall be protected by tarpaulins, water shed and other protective means.

2.5 Hydrostatic Test

Insulation shall be applied on vessels, heat exchangers, piping and other equipment only after successful completion of hydrostatic test. In case insulation work starts before completion of hydrostatic test, all welded and mechanical joints shall be left exposed for testing and subsequently insulated after successful completion of the hydrostatic test.

2.6 Co-ordination with Other Agencies

Contractor shall work in close co-ordination with the erection Contractor. Wherever temporary supports are provided the Contractor shall remove these and provide the necessary

insulating blocks (wood/PUF etc.) as per support standard or as specified in the bid package/tender.

2.7 Extent of Insulation

2.7.1 Items requiring Insulation

a. Items requiring insulation are specified in the piping line schedule and equipment/vessel/heat exchanger data sheets.
b. All attachments and projections such as vessel supports, structural steel attached to vessels, piping hanger supports, instrument lead lines, branch lines like vents, drains and instrument connections connected directly to cold insulated piping, vessels and equipment shall be cold insulated upto a distance of 4 times the adjoining insulation thickness.
c. All flanged joints, manhole covers, etc. shall be cold insulated with removable box insulation. For insulation of manhole covers refer Drg. No. 09.

2.7.2 Items not requiring insulation

a. Bonnet of valves above the packing glands.
b. Nameplates, stampings and code inspection plates on vessels & equipment

3.0 INSULATION MATERIALS

3.1 General

All materials used for insulation, fixing sealing and protection shall be new and shall conform to the details given below and in clause 4.0. All insulating materials whether dry or wet shall be non-corrosive to the surfaces insulated.

3.2 Insulation material for insulating piping, vessels and equipment in Cold and Dual temperature (Cold/Hot) service shall be as given below :

Operating temperature range	Insulation material
-110°C to +120°C	Polyurethane foam (PUF/PIR)

Note: Detailed Job Specification shall be prepared for materials other than PUF & for the temperature beyond the limits as specified in clause 1.1.

3.3 Form of insulation shall be as follows :

Pipes upto 400 NB	Preformed pipe sections
Pipes upto 450 NB	Preformed pipe sections/Radial lags
Vessel Shells	Radial lags
Vessel heads	Preformed sections or slabs contoured to the profile of vessel heads.
Equipments	Radial lags or slabs as applicable to form, contour of the service to be insulated.

3.4 Dimensions of preformed sections for piping insulation shall be defined by the outside diameter and insulation thickness. Tolerances for preformed sections shall be as under:

Outside diameter	-0%, + 5%
Concentricity	± 3% O.D.
Bore	+ 2mm, -0 mm
Length, width and thickness of slabs	± 2mm

3.5 The material used shall not disintegrate, settle, change its form or composition in a detrimental way at the service conditions.

3.6 The insulating material shall be chemically inert, moisture free, rot and vermin proof.

3.7 Preformed half sections and slabs shall be provided having their longitudinal and circumferential faces flat and smooth so as to mate with the mating sections of the whole face area. Ends of the preformed half sections shall be flat and perpendicular to the centre line.

3.8 Polyurethane Foam

3.8.1 The insulation material shall be rigid preformed cellular urethane foam of self extinguishing type in accordance with ASTM C 591, Type II, Grade 2. The foam shall be formulated in such a way that it shall be of a self extinguishing quality which under no circumstances shall cause fire to spread.

3.8.2 Composition

The insulation material shall be produced by reacting poly Isocyanates with polyhydroxy compounds and expanded with a blowing agent. The finished foam in the form of slabs or half sections shall be of uniform closed cell structures, free from unreacted materials, shrinkage and distortion.

3.8.3 Density

The density of finished foam shall be within 35.0 kg/m^3 to 40 kg/m^3 and shall be determined in accordance with ASTM C-302.

3.8.4 Thermal Conductivity

Thermal conductivity of the Polyurethane foam slabs and sections shall not exceed 0.019 K Cal/hr. m°c (0.16 BTU/ft^2 hr°F/in) at 10°C mean temperature after ageing. The thermal conductivity shall be tested by the method prescribed in ASTM C335.

3.8.5 Closed Cell Content

The closed cell content shall be at least 95% by volume.

4.0 ANCILLIARY MATERIALS

4.1 Wire-netting, Lacing & Binding Wire

Wire netting shall be galvanized 24 SWG x 20mm to secure insulation blocks. Lacing and stitching wires shall be 20 and 22 SWG galvanized iron wire respectively.

4.2 Bands

Bands shall be of Aluminum, of dimensions 20mm width x 24 SWG, unless specified otherwise.

4.3 Adhesives

The adhesive to be used for bonding insulation sections shall be Foster Fire Resistive Adhesive 81-33.

4.4 Vapour Seal

The vapour seal shall be Foster Fire Retardant Mastic 60-30.

4.5 Filler Material

PUF/PIR or Mineral Wool mixed with specified adhesive shall be packed rightly so as to fill all irregular voids and at contraction joints.

4.6 Joint Sealer

The joint sealer to be used for sealing insulation joints and at flashing of insulation shall be Foster Foam Seal Sealer 30-45.

4.7 Glass Cloth

The glass cloth to be used for vapour barrier reinforcement, shall be open weave 10 mesh Glass Cloth having glass fibre thickness of 5 mils.

4.8 Aluminium sheets for cladding of Vapour barrier on the insulation shall be as follows:

Application	Aluminium Sheet Gauge
a. Pipe Vessels and Equipment upto 500mm Nominal dia	26 SWG
b. Pipe Vessels and Equipment above 500mm Nominal dia	24 SWG
c. For Valves, flanges and other areas where mechanical damage is likely to occur	22 SWG

4.9 Anti-Corrosive Paint

One coat @ 65-75μ DFT of primer, inorganic zinc silicate shall be applied on all carbon steel and alloy steel piping and equipment before application of cold insulation. Items made of stainless steel and other non-ferrous alloys shall not be painted but shall be wrapped with 0.1mm aluminium foil before application of cold insulation unless specified otherwise.

4.10 Bituminized Roofing Felt

Bituminized self finishing roofing felt shall conform to IS: 1322, type 3, grade 1.

5.0 APPLICATION

5.1 General

The following applies to all types of cold insulated equipment and piping:

5.1.1 Surface Preparation

The surfaces of tanks, vessels, piping and valves etc. on which cold insulation is to be applied shall be free of dust, loose paint or any other foreign matter. The surface irregularities shall be filled up with the approved filler. One coat of anticorrosive primer (as per clause 4.9) shall be applied over the carbon/Alloy Steel surfaces to be insulated and allowed to dry before application of insulation.

5.1.2 Insulation Thickness and Limit

Insulation thickness shall be in accordance with the equipment data sheets and piping line schedule. Insulation thickness on item covered in clause 2.7.1a & 2.7.1b shall be equivalent to that on adjoining piping and equipment.

5.1.3 Vapour Barrier for Polyurethane Insulation

A 3.0 mm (wet) thick coating of vapour seal mastic shall be applied to the surface of the insulation as soon as possible after erection, to reduce the time the insulation is exposed to the weather to a minimum. Whilst this coat is still wet, glass cloth shall be laid over the surface and embedded in the mastic. Care shall be taken to ensure that the glass cloth is laid smooth and free from wrinkles, and that no pockets of air are trapped beneath the surface. At junctions in the glass cloth, the overlap shall not be less than 75mm. A second 3mm thick coat of mastic shall be applied after approximately twelve hours. When dry this coating shall be a minimum of 1.50mm thick. Care must be taken, however to ensure that the individual coats are not greater than 3mm (especially in corners), otherwise some cracking of dried coat may result. The total dry film thickness of vapour seal shall not be less than 2.5mm with a tolerance of -0% to +50%. The mastic shall not be applied over wet insulation or until the adhesive is dry. During this drying time the insulation shall be protected from the weather by tarpaulin or similar materials approved by the Engineer-in-Charge.

Where joints have been left uninsulated, a complete vapour seal as specified above shall be applied to the exposed end of the insulation and flashed weather tight on to the metal.

5.1.4 Vapour barrier shall be protected by cladding with aluminium sheets. Joints in aluminium sheet shall be staggered and suitably sealed with an approved sealer. Aluminium cladding shall not be applied until the vapour barrier has completely dried and its solvents have dissipated. Self tapping screws shall not be used to secure aluminium cladding as they may puncture the vapour barrier.

5.1.5 Expansion / Contraction Joints

When specified on a pipe line or vessel drawing or where deemed necessary to allow movement and contraction of the pipe or vessel without producing random cracking of the insulation, contraction joints shall be provided in the insulation. At contraction joint location, provision shall be made in aluminium cladding to accommodate contraction of pipe or vessel.

The following steps shall be taken:

a. Both longitudinal and circumferential joints in insulation shall be staggered.

b. Contraction joints shall be provided at an interval depending on pipe or vessel material contraction/expansion co-efficient and temperature. Unless otherwise specified contraction joints shall be provided at an interval of 6.0m on straight run of pipes or vessels operating at temperatures (-)40°C & below.

c. Contraction joints in horizontal vessel insulation shall be close to support points while on vertical pipes & vessels, the same shall be provided at support ring location and at an interval of 4.0m straight run.

d. A contraction joint shall consist of 12mm gap in the Insulation, loosely packed with filler material, as applicable, described under clause 4.5 to a depth of 6mm less than the adjacent insulation thickness. 6mm gap thus left shall be filled up by approved non-setting compound (Foster Foam seal 30-45 sealer or equivalent) and finished smooth with the surface of insulation. Vapour barrier which shall cover the joint shall be applied only after the compound has dried. Expn/contraction joint details in insulation for 'horizontal & vertical pipes' & for 'expansion bellows' are given in Drg. Nos 10.1 to 10.4.

5.1.6 Stainless Steel Piping & Equipment

All pipes, vessels and equipment of stainless steel construction shall be wrapped with 0.1mm thick aluminium foil with an overlap of 50mm having barium chromate sealer interposed in the joint prior to application of insulation. Foil shall be secured in position by aluminium bands, taking every precaution to avoid formation of pin holes or cracking in the aluminium foil. Cladding shall be done after the insulation and vapour barrier exactly the same way as for other pipes and equipment.

5.1.7 For all pipes, vessels, equipments etc. lying in a corrosive environment where Sulphur Dioxide or other corrosive media are likely to be present, stainless steel bands/clips shall be used to secure aluminium cladding in position.

5.1.8 Field Welding

Field welding of clips or other insulation supports on any vessel or piping, subjected to the pressure of operating fluid shall not be permitted. However, field welding on non pressure parts, to install insulation supports etc. can be permitted with prior approval of the Engineer-in-Charge, but extreme care shall be taken so that welding does not result in decrease of metal thickness or excessive burning of metal.

5.2 Application- Vessels & Equipment

5.2.1 General

Individual vessel and tank drawings indicate the location of insulation supports or anchorage, wherever required, to facilitate application of insulation and securing of insulation shall be provided by the contractor at his own cost. All surfaces shall be prepared as described in Clause 5.1.1 before application of insulation.

5.2.2 Single Layer Insulation

Insulation radial lags/preformed sections of handy sizes shall be installed on to the surfaces of vessels adhering to each other with applicable joint sealer and secured in position by G.I. wire netting and aluminium bands at an interval of 225mm. There shall be no through joints and the insulation shall not be bonded to the vessel.

5.2.3 Multilayer Insulation

The inner layer of insulation shall be bonded to the vessel with the applicable adhesive. Subsequent layers of insulation shall be bonded to the preceding layer, with the applicable adhesive. The joint sealer shall be applied to the ends and edges of all sections, including those in the inner most layer to seal all joints. Care shall be taken to ensure that the adhesive

is evenly spread over the entire surface of the application and the insulation is closely butted to each other both longitudinally and circumferentially.

All the layers except the final shall be secured in position by metallic bands at an interval of 225 mm while the final layer shall be first secured with G.I. wire net and then with metallic bands at an interval of 225mm. Bands shall be staggered on successive layers. There shall be no through joints in the insulation.

5.2.4 Filling

All the cracks and voids in the main insulation shall be filled up with applicable filler material, as described under clause 4.5.

5.3 Vertical Vessels

5.3.1 Shell (Cylindrical)

Slabs in handy sizes as given below shall be applied resting onto the supports with joints tightly butted, staggered & adhering to each other with applicable adhesive and secured in position by circumferential metallic bands at a pitch of 225mm.

For vessels upto 2.5m O.D.	-	Radial lags of suitable width
For vessels over 2.5m O.D.	-	Radial lags. However the procedure given below can be used as an alternative.

Flat insulation slabs of width not more than 300mm shall be cut longitudinally to have notch (es) of suitable size spaced at suitable spacing, so as to form a radial segment suitable for the profile of the vessel shell. However extreme care shall be taken to ensure that no air pockets are formed in the finished insulation. All insulation joints shall be sealed with applicable joint sealer.

Where more than one layer is used, each layer shall be banded separately as given in Clause 5.2.3. Method of application shall be as given in Drg. No. 01. When mineral wool insulation is used, notches shall not be cut as the insulation itself is semi rigid and can be pressed to form contour of the shell.

5.3.2 Top Heads

Shaped insulation sections shall be installed on top head, banded and butted tightly to each other. Insulation shall be held in position by making use of galvanized iron floating ring (25mm x 0.6mm) placed over the insulation and positioned in the centre of the head so as not to touch the nozzle at the vortex. The insulation shall be held in position by use of radial metallic bands, one end of which shall be fastened to floating ring and the other end shall be anchored to the band(s) placed around the cylindrical section close to the head. Radial bands shall be spaced on 300mm centres measured around the circumference of the vessel.

The final layer of insulation shall be held in position also by metallic wire net laced at the nozzle location by 2-3 loops of 10 SWG galvanized wire and to the wire net over insulation on the shell at the cylindrical section close to the head.

When there is no nozzle at the top at the Vortex, the insulation shall be held in position by wire netting and metallic bands stretched over the head and anchored on the cylindrical section close to the head by circumferential metallic band(s) on the shell and near the head.

5.3.3 Bottom Heads

In all the skirt supported vessels, insulation supports are provided inside the skirt as indicated in the equipment drawings, Drg No. 15.

Floating ring and wire loops around the nozzle and bands shall be used to support downward facing of insulation. Such a floating ring shall be positioned centrally around the nozzle but over the insulation by radial bands anchored to the lagging support angle ring fixed inside the skirt at a pitch of 300mm measured over the support angle ring.

If nozzle is not existing, metallic bands shall be stretched across the bottom head and anchored with lagging support angle ring inside the skirt. All the wire ends of wire netting shall be cut short and turned into the insulation.

5.4 Horizontal Vessels

The insulation radial lags of handy sizes shall be installed in close contact with the faces to be insulated and held in position by G.I. wire netting and metallic bands at a pitch of 225mm. Where more than one layer is required, each layer shall be banded separately. The bands for successive layers shall not coincide with each other, wire netting on the final layer shall be applied and ends shall be laced together by lacing wire before putting the metallic bands as per Clause 5.2.3.

Insulation sections on the vessel heads shall be secured in position by wire netting and metallic bands stretched across the heads and anchored to circumferential metallic band(s) on the shell near the heads. Anchoring of bands measured on the circumference of shell shall be of a pitch of 225mm max. Method of application of insulation shall be as given in Drg No. 02.

5.5 Tank Insulation

Material and method of application for tanks shall be the same as specified for vessels. Flat aluminium sheets for weather proofing shall be used exactly in the same manner as specified for other vessels.

5.6 Spherical Vessels

Insulation of spherical vessels shall be performed as shown in Drg No. 03. Before commencing the application of insulation, the contractor shall ensure that exterior surfaces have been prepared in accordance with clause 5.1.1. Shaped insulation to fit curvature of sphere shall be bonded to the vessel with applicable adhesive. All insulation joints shall be sealed with applicable joint sealer. The inner layer of insulation shall be held in position by 20mm x 20 SWG aluminium bands of 300mm max. centres of the equator. These bands are tied up with the rings provided as per EII std 7-13-0034. The bands being staggered on successive layers and the clips of the bands being recessed into the insulation. Over the outer layer galvanized wire netting shall be spread over and laced together.

5.7 Vapour Barrier

Vapour barrier shall be applied on all the vessels described above as per the procedure outlined in Clause 5.1.3.

5.8 Metal Sheet Finishing

5.8.1 Horizontal Vessels

The insulation shall be covered with aluminium sheeting with all the longitudinal and circumferential joints having an overlap of minimum 50mm. All longitudinal and circumferential joints shall be sealed with suitable approved bituminized mastic sealer. Aluminium sheeting shall be secured in position by metallic bands on the shell at a max. pitch of 425mm. All the longitudinal joints with overlap of 50mm in the aluminium sheet shall be kept below the horizontal plane passing through the axis of the vessel to prevent water or other spillage from entering into the insulation.

Jacketing for dished heads shall be fabricated from radial segments with the radial overlap of minimum 50mm. The sheeting shall be secured in position by radial tensioned metallic bands stretched over the heads. One end of each band is anchored to the circumferential band(s) on the shell while the other is fastened (pop riveted) to 6mm dia. Floating rod ring which can be replaced by 6mm thick strip (G.I.) rolled in the form of a ring. Radial metallic bands, measured over the circumference of shell, shall be at a pitch of 300mm. All the sheet metal joints shall be properly sealed with approved sealing mastic.

5.8.2 Vertical Vessels

The aluminium sheeting shall be adequately rolled and installed over the insulation such that all the longitudinal joints are staggered. All the longitudinal and circumferential joints shall have an overlap of 50mm minimum and suitably sealed with approved mastic sealer. Aluminium sheeting shall be secured in position by tensioned metallic bands installed circumferentially at a max. pitch of 425mm.

a. Top Heads

Insulation shall be covered with flat aluminium jackjet fabricated in segmental form with lapped joints properly sealed with approved mastic sealer. Over-lapping of sheet metal joints shall not be less than 50mm. Aluminium jacket shall be secured in position by radial tensioned metallic bands anchored to the circumferential band(s) of vessel on one side and fastened to 6mm dia. floating rod ring, centralized at the vortex of head on the other side. 6mm thick metallic (G.I.) strip rolled into a ring can be a substitute for 6mm dia. Rod. Pitch of radial bands measured over the circumferential bands of shell shall be max. 300mm.

b. Bottom Heads

Aluminium sheeting shall be installed exactly in the same manner as indicated for top heads.

5.8.3 Spherical Vessels

Cladding of each hemisphere of spherical vessel shall be done with aluminium sheets placed horizontally and a thick circumferential tensioned band (6mm thick) shall be used at the equator to hold the radial metallic bands.

5.8.4 Others

Openings in metal jackets for nozzles, manways, brackets etc. shall be cut as close as possible for a snug fit.

5.9 Flashing

All openings through insulation finish shall be flashed weather tight particularly where connections are not insulated. Flashing shall be carried out as per details given in Drg Nos 14.1 & 14.2. Skirt supported vessels shall have the skirt insulated inside and outside for at least 600mm below the tangent line or such that temp. of adjacent non insulated surfaces of the skirt shall not be below dew point. Proper flashing and sealing shall be done on skirt where insulation and subsequent metal finish terminates as given in Drg No. 15.

5.10 Exchanger Insulation

Exchanger shells except for channels and channel covers shall be insulated and weather proofed as specified for vessels.

Exchanger channels and channel covers including flange bolting shall be insulated with removable aluminium covers lined with insulation slabs of required thickness.

5.11 Machinery

In general, removable aluminium boxes lined with slab insulation of required thickness shall be used for insulation of machinery after giving a coat of anticorrosive paint. The contractor shall submit details of individual pieces of equipment depending on the nature of items to be insulated to the Engineer-in Charge of site for approval.

5.12 Application – Piping

5.12.1 General

Insulation shall be applied on after ensuring that piping to be insulated is properly installed, supported and tested. Refer Drg No. 04 for application of insulation.

5.12.2 Horizontal Piping

a. Piping surface shall be cleaned of loose rust, mill scale, grease, dust or any other foreign contaminants. Surface preparation shall be done in accordance with clause 5.1.1.

b. The insulation shall be applied to pipes in half round sections in reasonably handy sizes.

   Where insulation thickness required is greater than 50mm or that the metal temp. is below (-) 40°C, multilayer construction shall be followed with all the joints staggered in successive layers.

c. The inner layer of insulation shall be bonded to the piping with applicable adhesive. Subsequent layers of insulation shall be bonded to the preceding layers with the above adhesive. Joint sealer shall be applied to the ends and edges of all sections for sealing all longitudinal and circumferential joints. Adhesive shall be applied evenly and the half sections shall be closely butted to each other both longitudinally and circumferentially.

d. All the insulation layers except the final shall be secured in position by metallic bands at an interval of 225mm, while the final layer shall first be secured with G.I. wire netting and then with metallic bands at an interval of 225mm. Bands shall be staggered on successive layers.

e. Insulation of piping shall be stopped short of flanges to allow for withdrawal of bolts. For fittings, the insulation shall be completed by applying cut segments of the same insulation sections used for pipes.

f. Any cracks of irregularities in the external surface of insulation sections shall be filled up by applicable filler material, as described under clause 4.5.

g. For long run of pipes, the ends of insulation sections shall be sealed off at 12m intervals and vapour barrier carried down upto the metal surface.

h. Contraction joints shall be provided at an interval of 6.0m unless otherwise specified as per Clause 5.1.5.

5.12.3 Vapour Barrier

Vapour barrier shall be applied over the insulation as outlined in Clause 5.1.3.

5.12.4 Metal Sheet Finishing

Vapour barrier (after it has dried) shall be protected by cladding it with specified Aluminium sheeting. All joints between adjacent aluminium sheets shall be staggered and grooved with a minimum overlap of 25mm, and suitably sealed with approved sealer. The longitudinal joints shall have single grooves while the circumferential joints shall have two grooves. Aluminium or G.I. bands/clips at an interval of 425mm shall be used to secure the aluminium cladding in position. Self tapping screws shall not be used.

For pipes, vessels and equipments lying in a corrosive environment where Sulphur Dioxide is likely to be present, stainless steel bands/clips spaced at invervals of 425mm shall be used to secure the aluminium cladding in position.

5.12.5 Vertical Piping

Insulation, vapour barrier and metal sheet finishing shall be performed as specified for horizontal piping. Contraction joints shall be provided in accordance with clause 5.1.5.

Insulation support/spacer rings shall be provided at an interval of 4.0m (if other insulation supports are not already existing on the pipe) as shown in Drg No. 05.

5.12.6 Pipe Supports & Hangers

In all the supporting arrangements of both horizontal and vertical piping, dry hard wood pipe support bearing blocks coated with fire retardant paint/mastic or PUF, as applicable, shall be used. Metal cradles, metal pipe supports and hangers shall be attached to outside of the pipe support bearing blocks and not directly to bore pipe. Provision shall be made to prevent seepage of water into the insulation from pipe hangers.

5.12.7 Flanges & Valves

Removable covers shall be provided over all flanges and valves. Insulation shall be performed as per the details given in Drg 7 & 8. Loose fill mineral wool backed up by slab insulation of thickness equal to that an adjacent pipe shall be applied. Aluminium covers over the valves and flanges shall be fitted with quick release clips. This application shall be proposed for each case by the insulation contractor and approved by the Engineer-in-Charge.

5.12.8 Refrigerant Traced Lines

a. The lines to be refrigerant traced shall be given in the line schedule and also shall be given in layout drawings and isometrics.

b. When lines are traced with one or more tracers, insulation shall be of sufficient size to house the assembly without distortion or damage to the insulation.

c. The refrigerant traced assemblies shall be first wrapped with specified wire netting, thus ensuring tracer pipe wearing tightly against the line refrigerant – traced.

d. Application of insulation shall be exactly the same as for piping described earlier and as given in Drg. No. 13.

e. Application of vapour barrier and cladding with aluminium sheet shall also be same as for piping described earlier.

6.0 APPLICATION OF INSULATION ON PIPING, VESSELS & EQUIPMENT IN DUAL TEMPERATURE SERVICE (HOT/COLD)

PUF/PIR shall be insulation material for dual temperature service for the temperature range as specified in clause 3.2. Application of the same shall be in accordance with the procedure laid down in clause 5.0, for piping, vessels and equipment, as applicable. Other forms of insulation materials may be used if specified in the **'JOB SPECIFICATIONS'**.

7.0 COLD INSULATION OF PIPING LOCATED AT OR BELOW GROUND LEVEL AND WHERE THERE IS A LIKELYHOOD OF FOOT TRAFFIC

7.1 Material of insulation shall be preformed sections of Polyurethane, as indicated in clause 3.3.

7.2 For Polyurethane insulation material, application shall be carried out in accordance with the procedure specified in clause 5.0, for piping, vessels and equipment, as applicable, except that instead of providing aluminium cladding over the final layer of vapour barrier, the procedure laid down in clause 7.3 shall be adopted.

7.3 Bituminized self finishing roofing felt shall be wrapped over the final layer of vapour barrier after it has fully dried, with an overlap of minimum 50mm both on longitudinal and circumferential joints.

7.3.1 The roofing felt shall be secured with the specified galvanized iron wire netting, laced with 20 SWG galvanized iron wire.

7.3.2 3mm thick Bitumen Emulsion mastic shall be applied for water and weather proofing.

7.3.3 When bitumen emulsion has completely dried, the surfaces shall be painted with two coats of bitumen based aluminium paint.

8.0 SAFETY

The insulation contractor shall provide adequate protective appliances like hand gloves, masks, glasses etc. to the workmen carrying out the insulation work, to protect them from inhaling and touching insulation dust and fibres.

9.0 GUARANTEE

9.1 The insulation contractor shall submit along with the tender, authentic test certificates confirming that the insulation materials offered conform to the requirements of this specification and the Standards mentioned therein. Any deviations shall be clearly stated.

9.2 The insulation contractor shall guarantee the following :

9.2.1 The insulation and ancillary materials are new and unused and conform to the Standards mentioned in the Specification.

9.2.2 The operating thermal conductivity shall be as specified.

9.2.3 The workmanship in execution of the insulation works shall be in accordance with sound engineering practice.

10.0 ATTACHMENT DRAWINGS

S.No.	Description	Drawing
1	Vertical Vessels- Cold insulation with Aluminium cladding on shell, top and bottom heads	DRAWING. No. 01
2	Horizontal Vessels- Cold insulation with Aluminium cladding	DRAWING. No. 02
3	Cold insulation for Spherical Vessels	DRAWING. No. 03
4.	Typical Cold insulation for Horizontal Pipes	DRAWING. No. 04
5.	Insulation Supports for Vertical Pipes	DRAWING. No. 05
6.	Method of Insulating feet of Vessels	DRAWING. No. 06
7.	Typical Cold Insulation for Flanged Joints	DRAWING. No. 07
8.	Typical Cold Insulation for Valves	DRAWING. No. 08
9.	Cold Insulation for Manholes	DRAWING. No. 09
10.	Multilayer Insulation Contraction Joint- Horizontal Vessels & Piping	DRAWING. No. 10.1
11.	Single layer Insulation Contraction Joint- Horizontal Vessels & Piping	DRAWING. No. 10.2
12.	Contraction Joint- Mechanical Expansion	DRAWING. No. 10.3
13.	Contraction Joint- Vertical Vessels & Piping	DRAWING. No. 10.4
14.	Supports for Block Insulation	DRAWING. No. 11.1
15.	Clips on Heads and inside of Skirt for Block Insulation	DRAWING. No. 11.2
16.	Details of Spacer Ring	DRAWING. No. 12
17.	Refrigerant Tracing Insulation	DRAWING. No. 13
18.	Method of Lagging Flanged Joints of Vessels	DRAWING. No. 14.1 & 14.2
19.	Method of Insulating Vessel Skirt (Alternative for Half or Full Insulation of Skirt)	DRAWING. No. 15

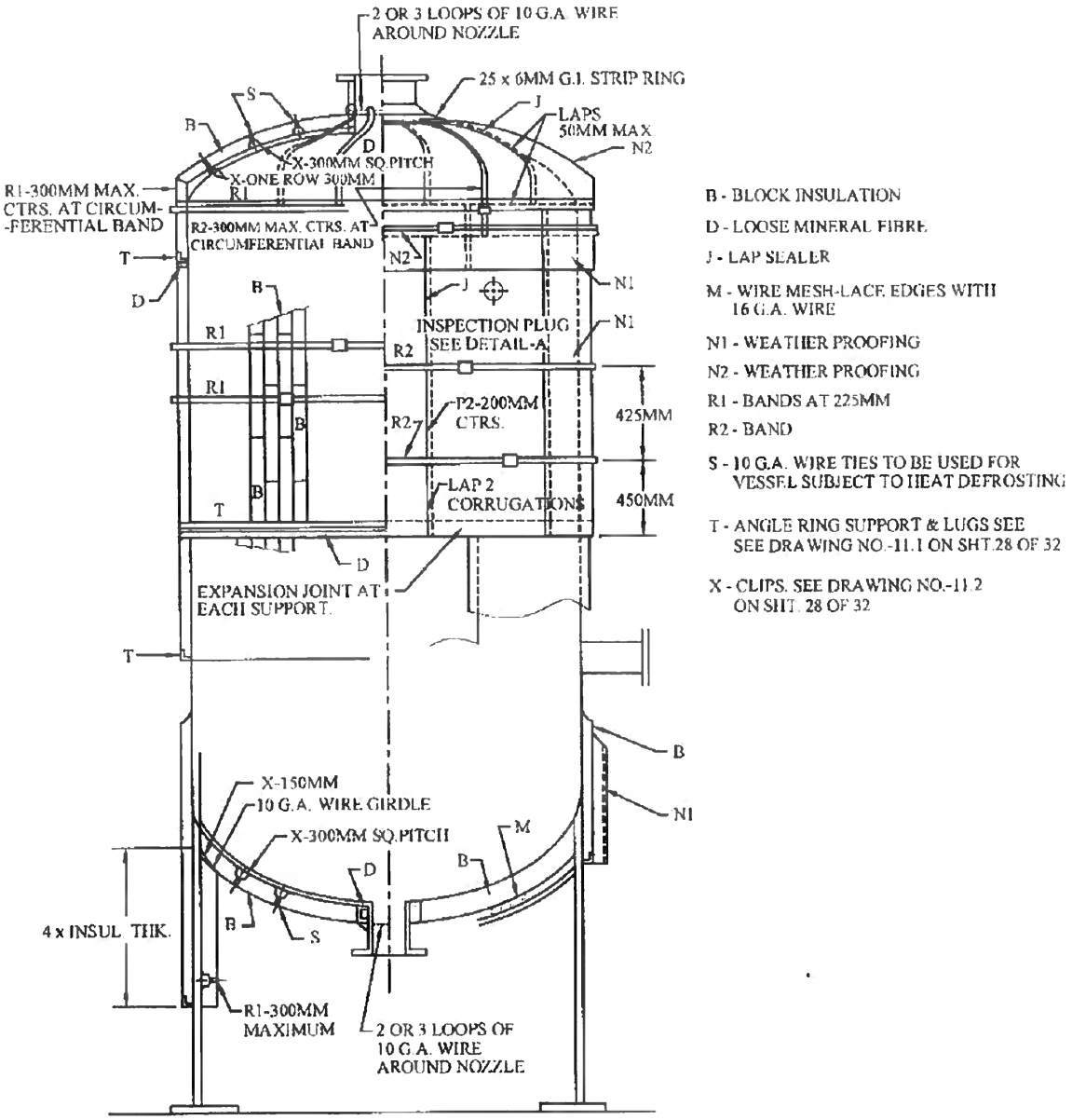

VERTICAL VESSELS- COLD INSULATION WITH ALUMINIUM CLADDING ON SHELL TOP & BOTTOM HEADS

DRAWING NO. - 01

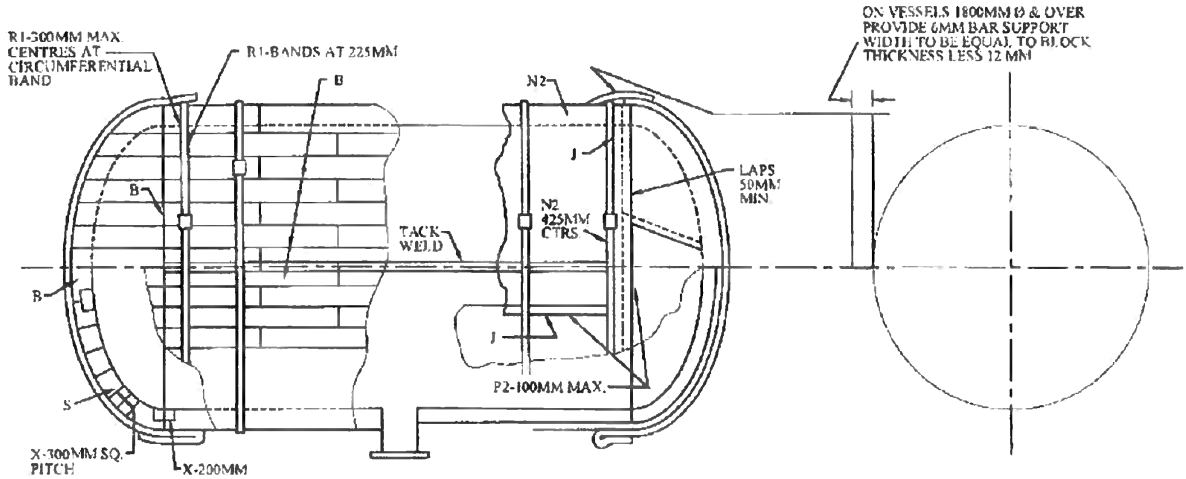

FOR S, B, N1, N2, R1, R2 & J REFER SHT 17 OF 32

HORIZONTAL VESSELS - COLD INSULATION WITH ALUMINIUM CLADDING

DRAWING NO.-02

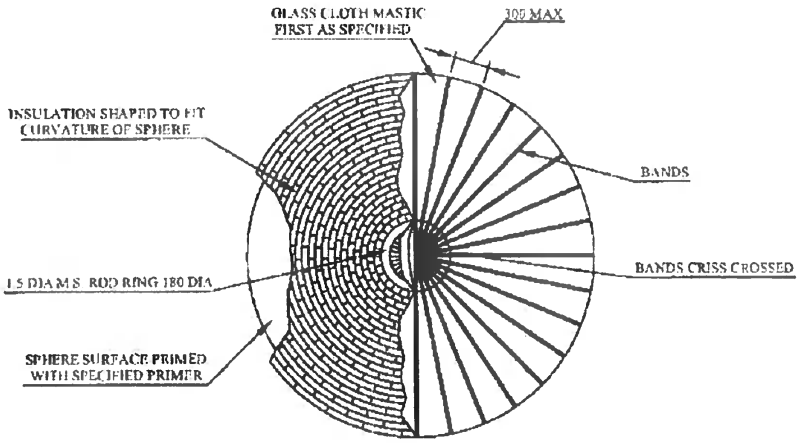

BOTTOM VIEW

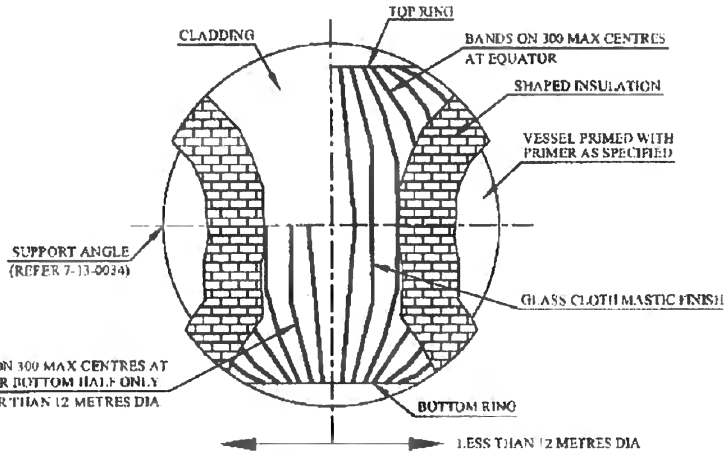

ELEVATION VIEW

FIG.3-1 MULTI-LAYER APPLICATION

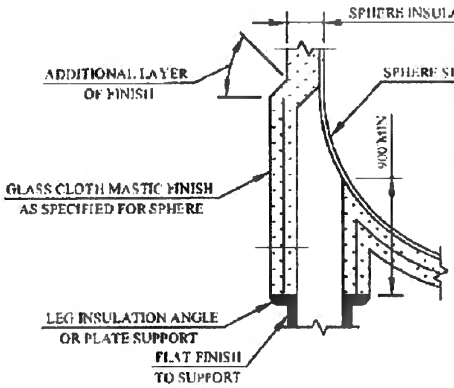

FIG.3-2 LEG INSULATION DETAIL

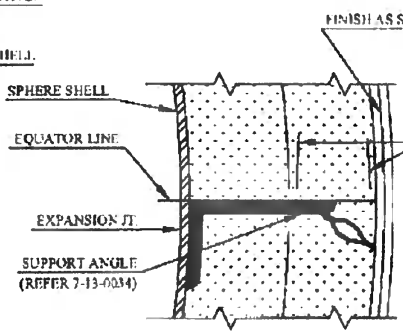

ADDITIONAL LAYER OF FINISH
300 MIN. WIDTH

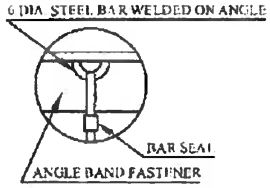

FIG.3-3 INSULATION DETAIL NEAR SUPPORT ANGLE

NOTE: FOR DETAILS OF INSULATION SUPPORTS REFER STD. NO: 7-13-0034

COLD INSULATION FOR SPHERICAL VESSELS

DRAWING NO.-03

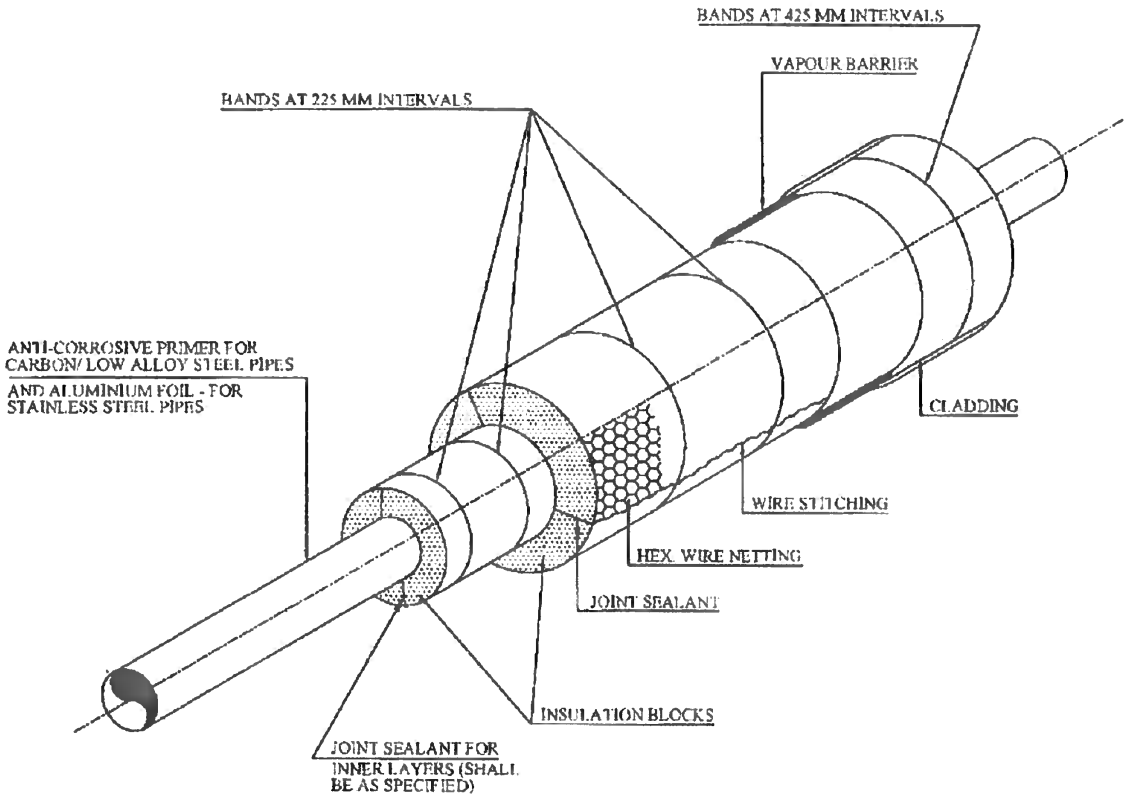

Multilayer Insulation with Preformed Blocks

TYPICAL COLD INSULATION ON HORIZONTAL PIPES

DRAWING NO.-04

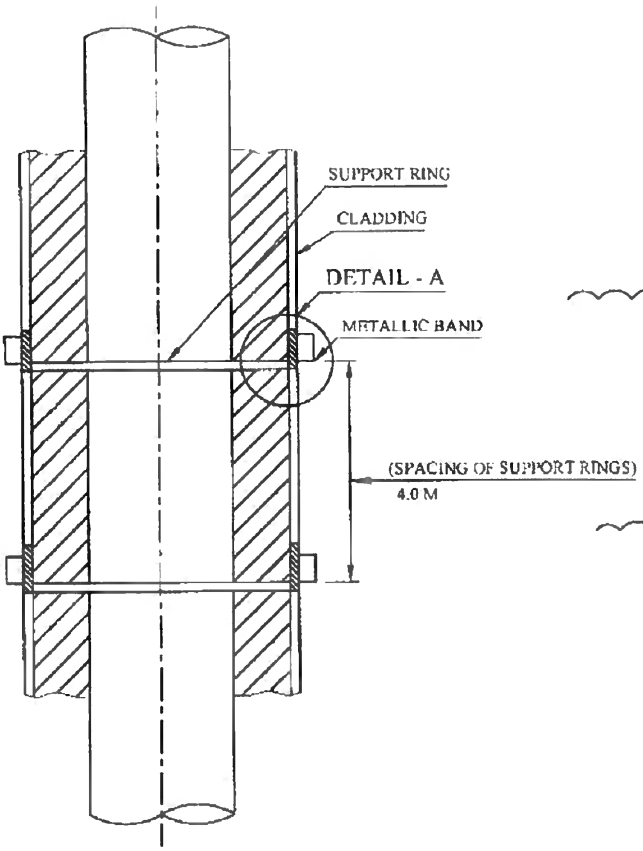

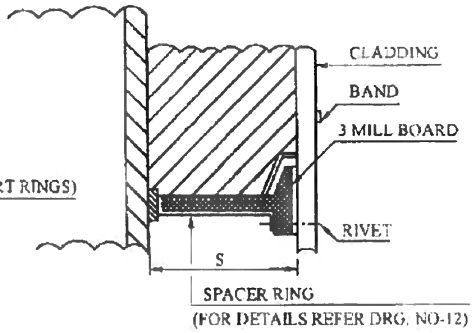

DETAIL - A

INSULATION SUPPORT FOR VERTICAL PIPING

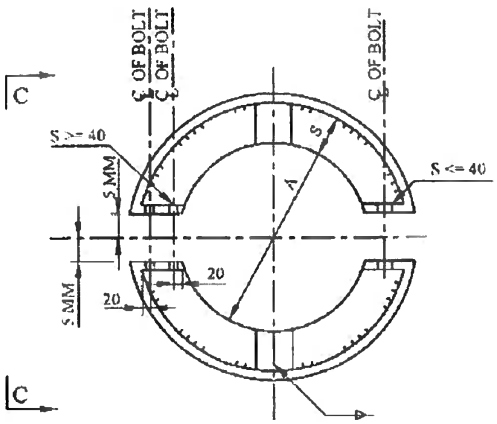

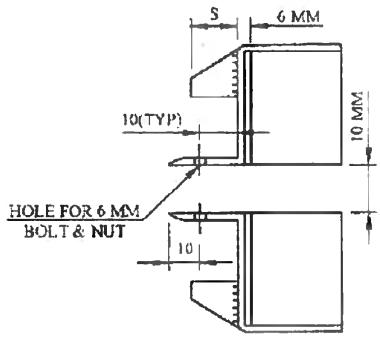

VIEW C-C

LEGEND:

A DIMENSIONS TO MATCH O.D. OF PIPE OR O.D. OF VESSEL

S INSULATION THICKNESS

SUPPORT RING FOR VERTICAL INSULATED PIPING
DRAWING NO.-05

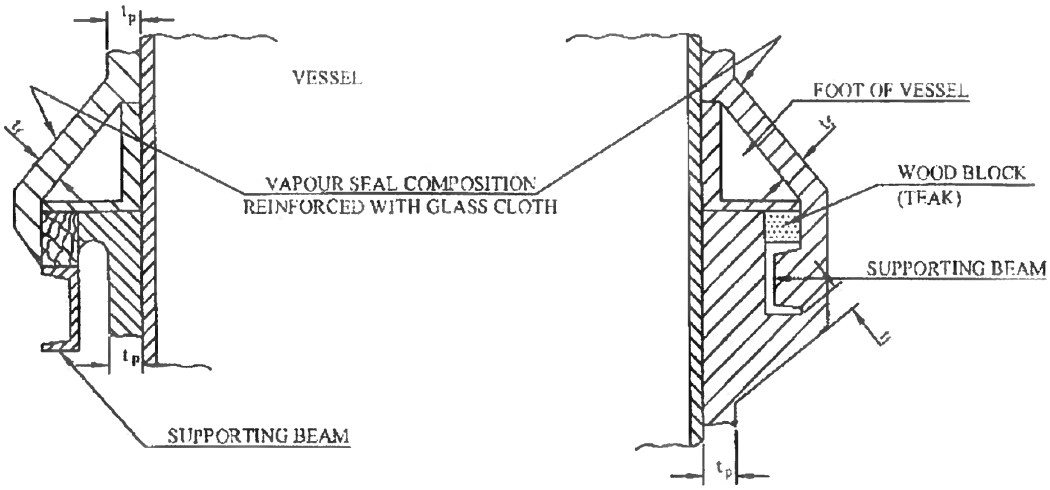

NOTE : ALL CORNERS MUST BE ROUNDED. MINIMUM RADIUS 25 MM.

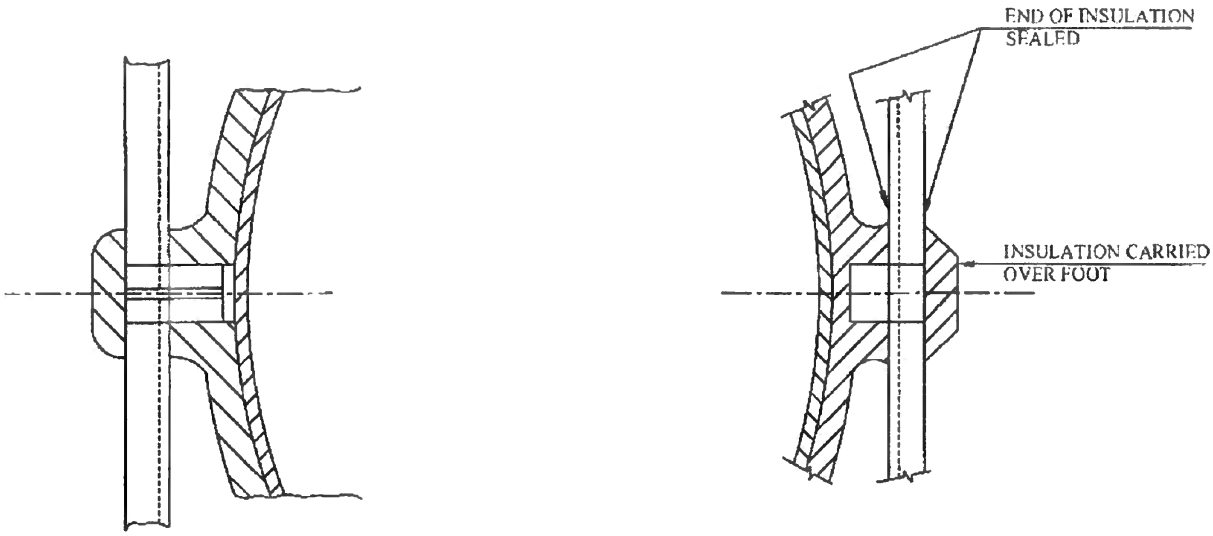

t_p = THICKNESS OF VESSEL INSULATION
$t_f = t_p$ t_f = 100 MM WHERE t_p IS BETWEEN 100 MM & 125 MM

METHOD OF INSULATING FEET OF VESSELS

DRAWING NO.-06

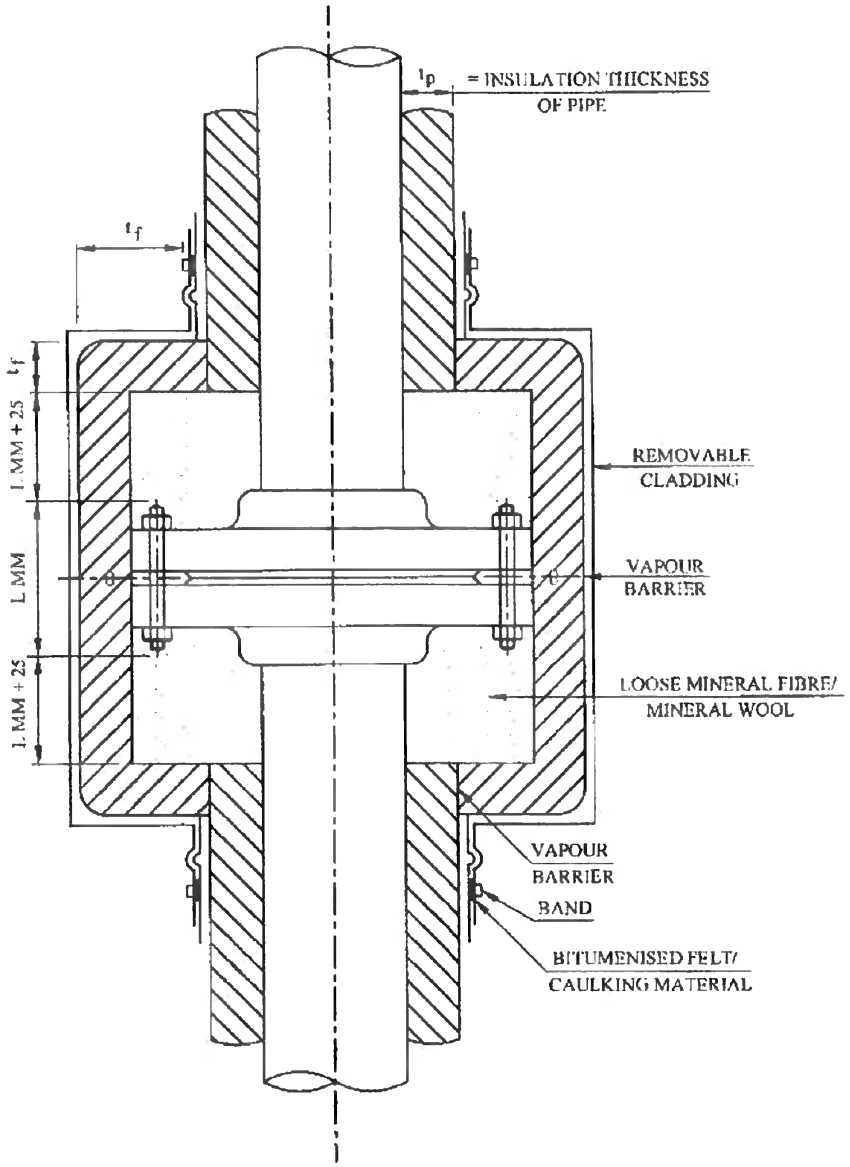

t_p = THICKNESS OF LAGGING PIPE

t_f = THICKNESS OF LAGGING FLANGE

t_f = 100 MM WHERE t_p >100MM

t_f = t_p WHERE t_p <100MM

TYPICAL COLD INSULATION FOR FLANGED JOINT

DRAWING NO.-07

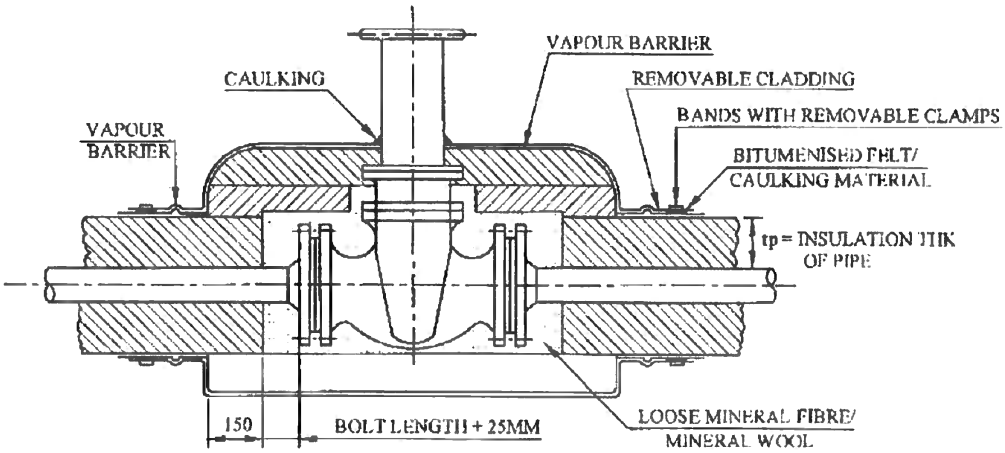

NOTES:

1. SUITABLE FLASHING TO BE PROVIDED TO RESULT IN EFFECTIVE VAPOUR BARRIER
2. THE INSULATION OF VALVE SHALL BE OF SUCH DESIGN THAT IT CAN BE REMOVED WITHOUT DISTURBING THE ADJACENT PIPE INSULATION

TYPICAL COLD INSULATION FOR VALVES

DRAWING NO.-08

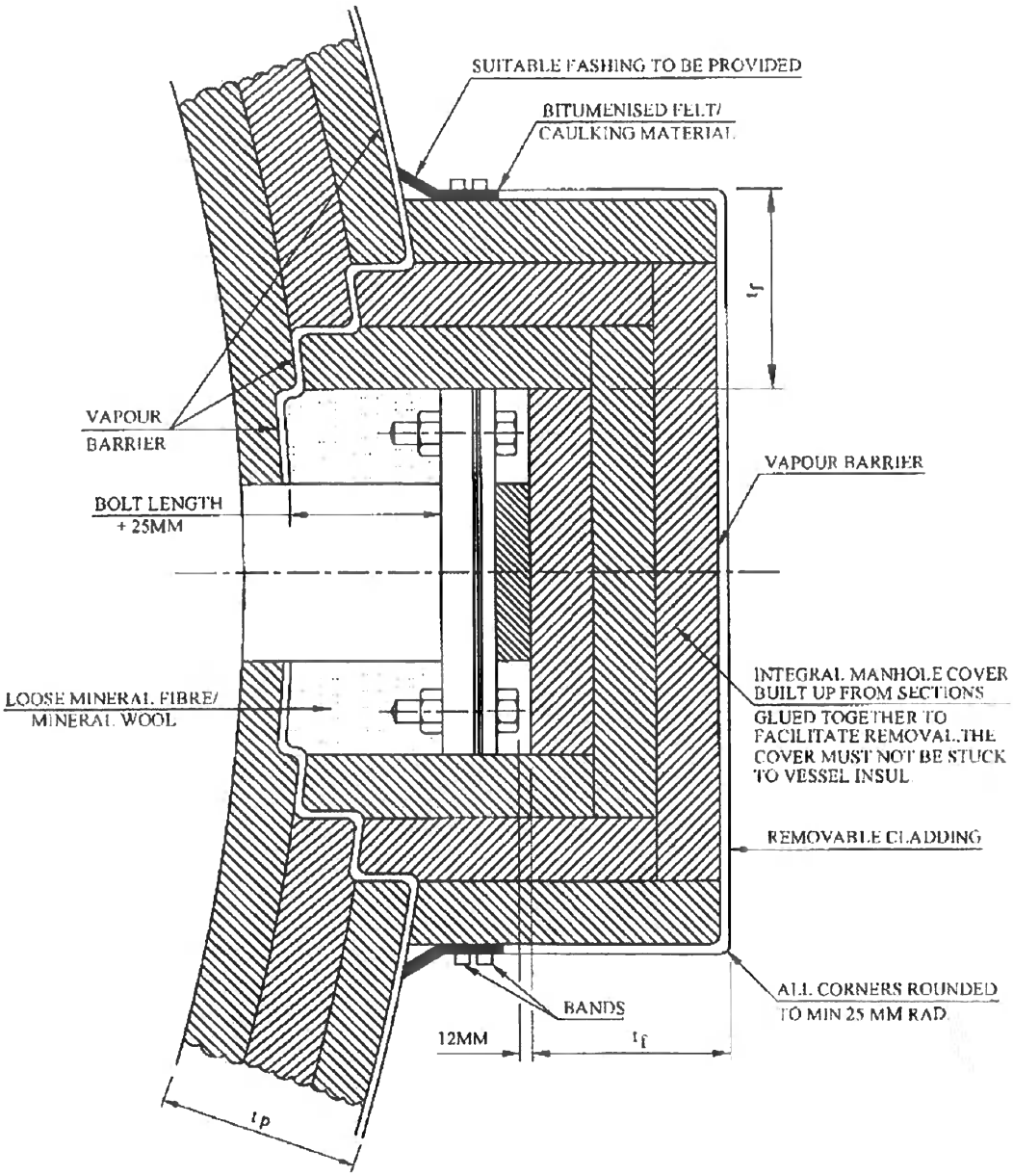

t_p = THICKNESS OF LAGGING IN VESSELS

t_f = THICKNESS OF LAGGING IN FLANGES

t_f = t_p + 25 MM WHERE t_p >125 MM

t_f = 100 MM WHERE t_p IS BETWEEN 100 MM & 125 MM

t_f = t_p WHERE t_p <100 MM

COLD INSULATION FOR MANHOLES

DRAWING NO.-09

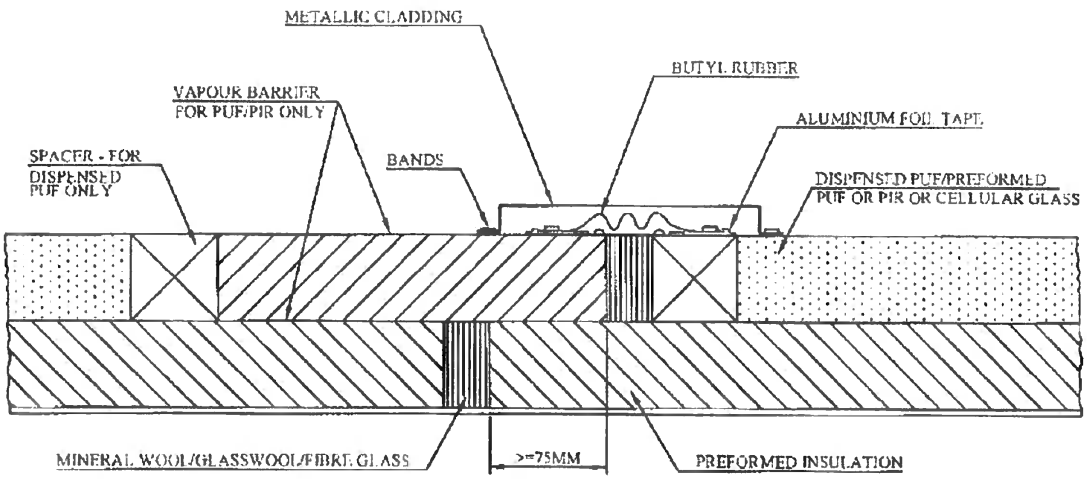

MULTILAYER INSULATION
CONTRACTION JOINT – HORIZONTAL VESSELS & PIPING

DRAWING NO.-10.1

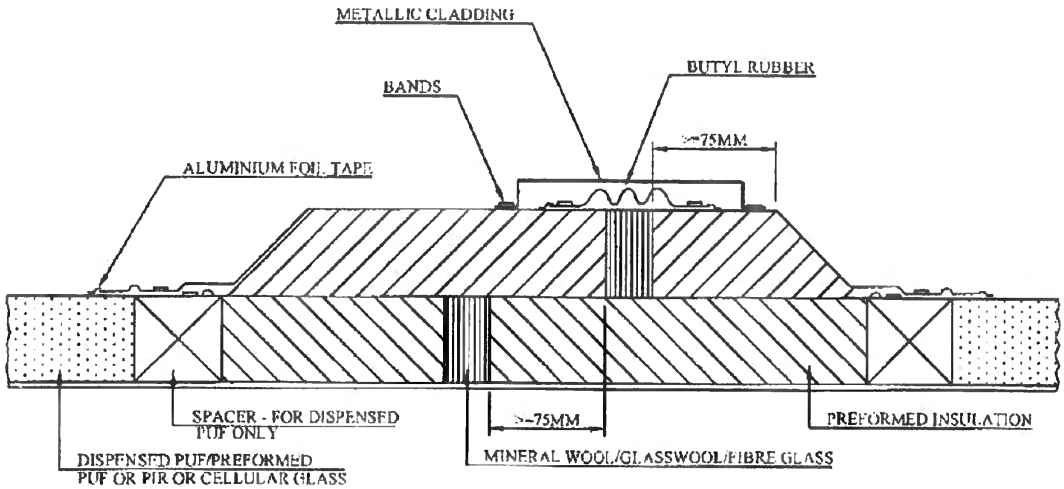

SINGLE LAYER INSULATION
CONTRACTION JOINT – HORIZONTAL VESSELS & PIPING

DRAWING NO.-10.2

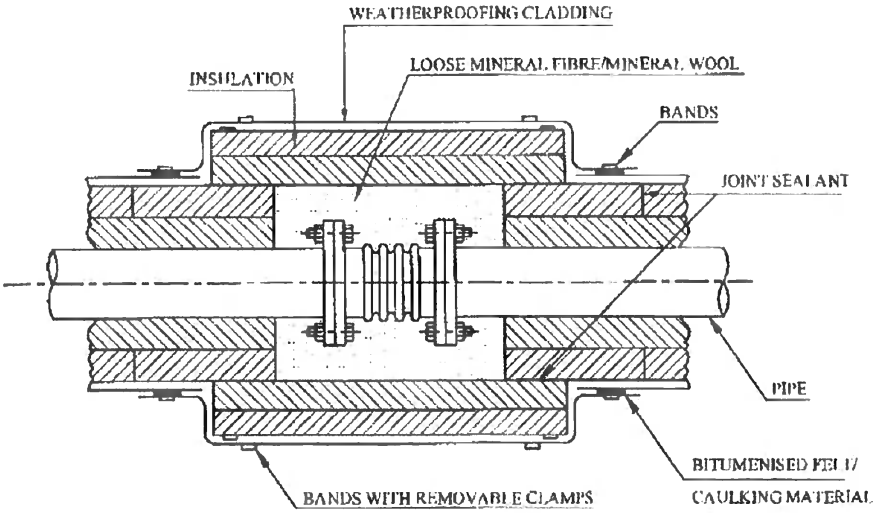

CONTRACTION JOINT – MECHANICAL EXPANSION

DRAWING NO.-10.3

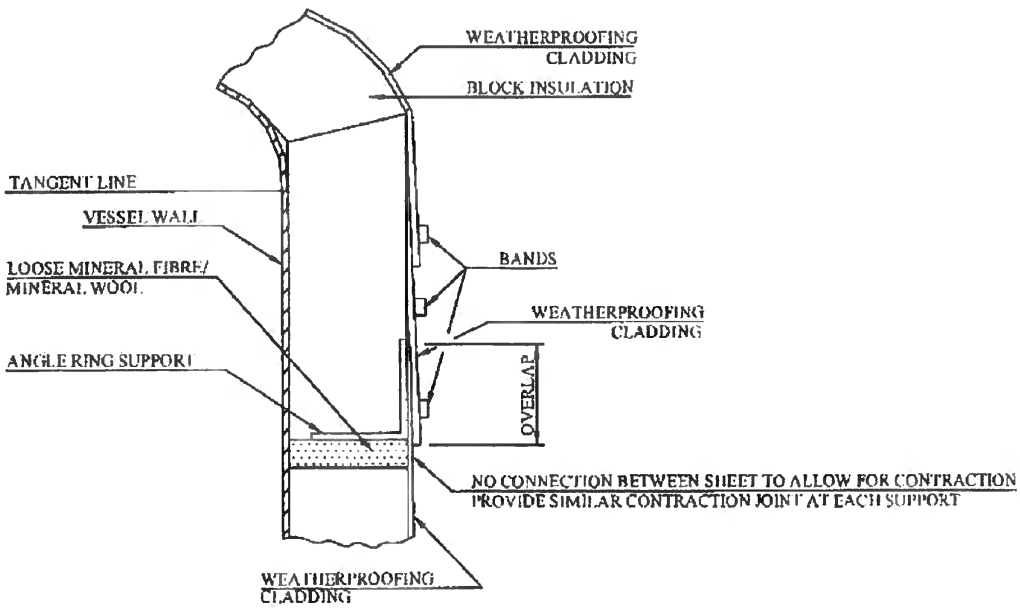

CONTRACTION JOINT – VERTICAL VESSELS & PIPING

DRAWING NO.-10.4

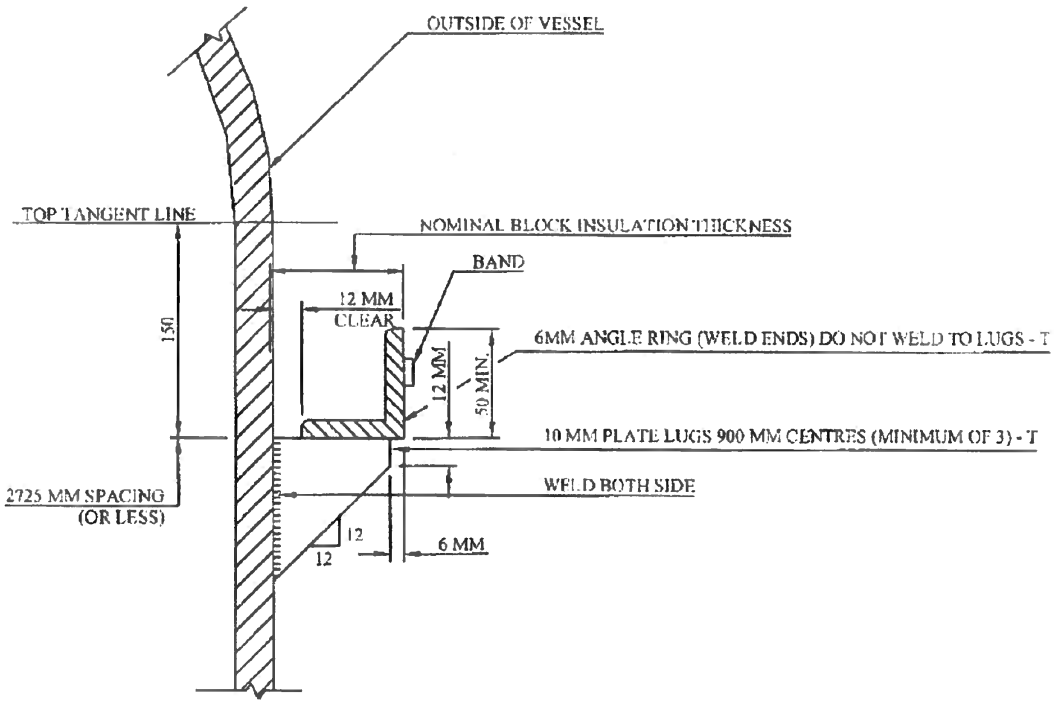

SUPPORTS FOR BLOCK INSULATION
DRAWING NO.-11.1

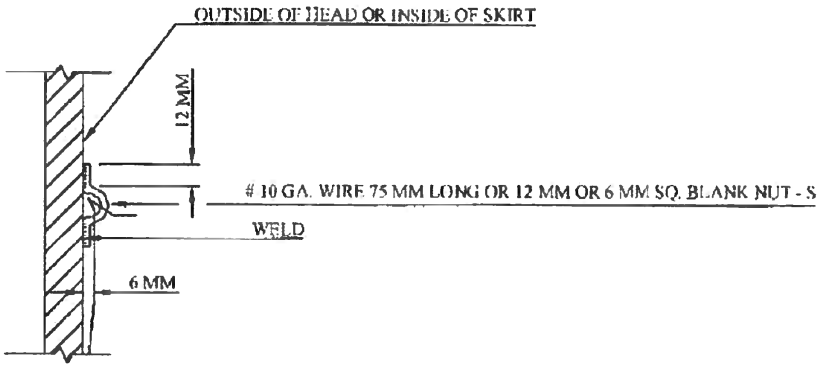

CLIPS ON HEADS AND INSIDE SKIRT FOR BLOCK INSULATION
DRAWING NO-11.2

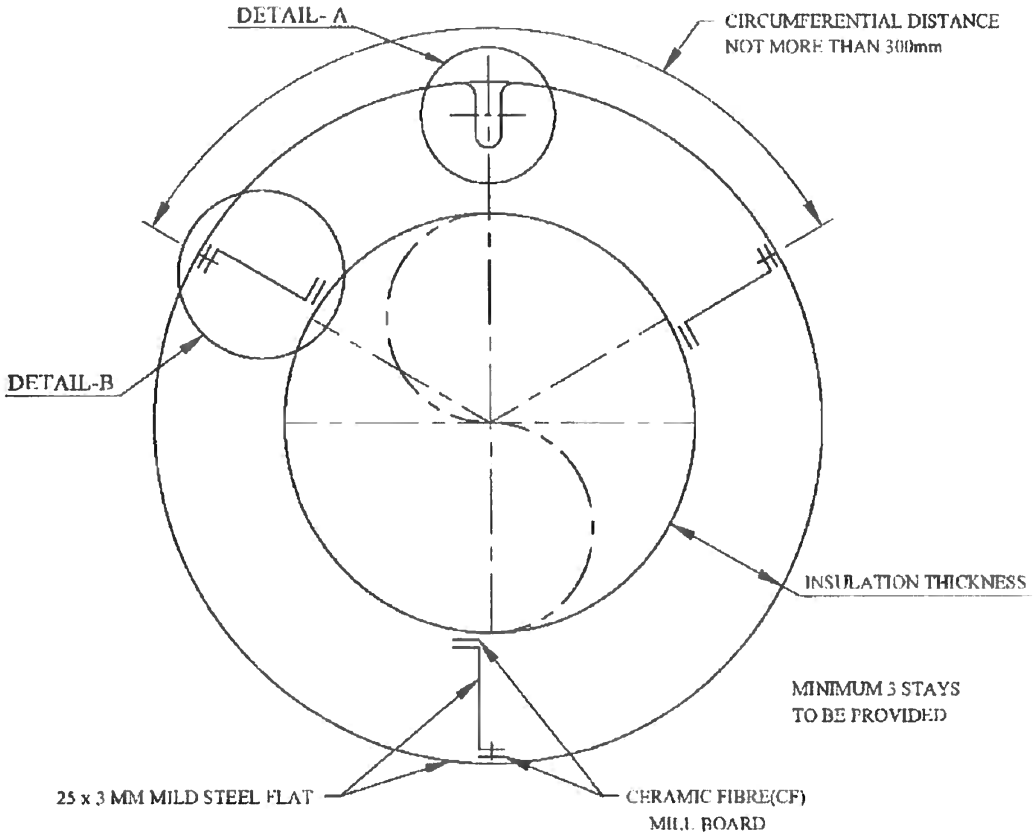

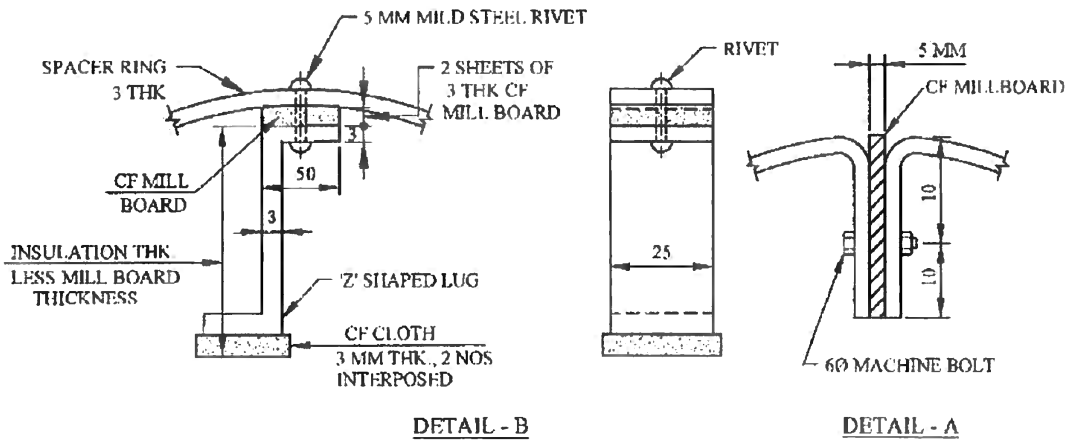

DETAIL OF SPACER RING

DRAWING NO.-12

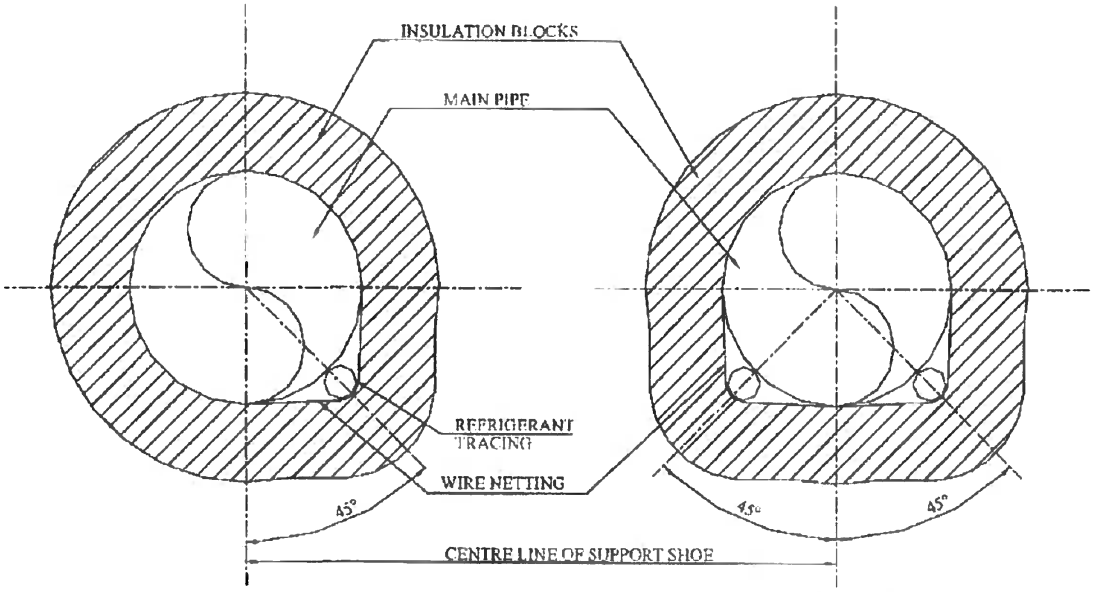

SINGLE TRACER DETAIL

DOUBLE TRACER DETAIL

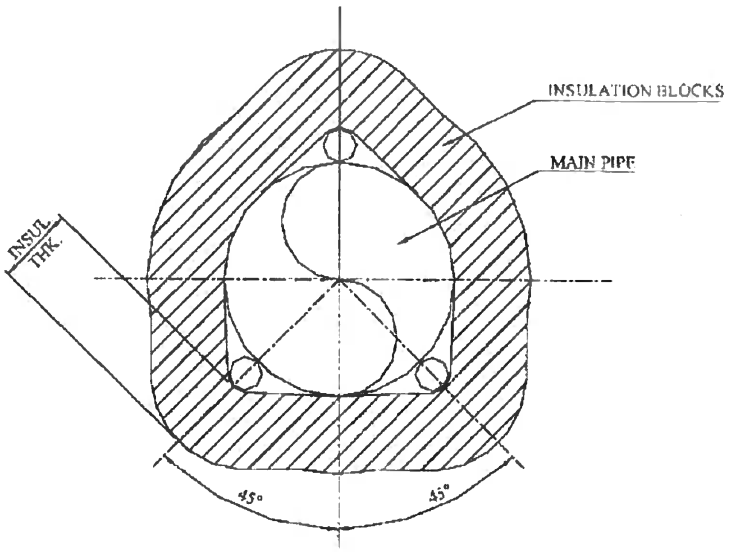

TRIPLE TRACER DETAIL

REFRIGERANT TRACING INSULATION

DRAWING NO.-13

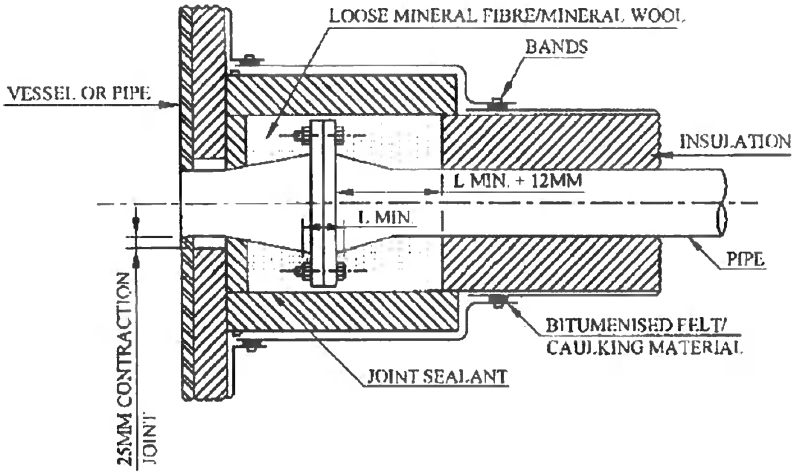

DRAWING NO.-14.1

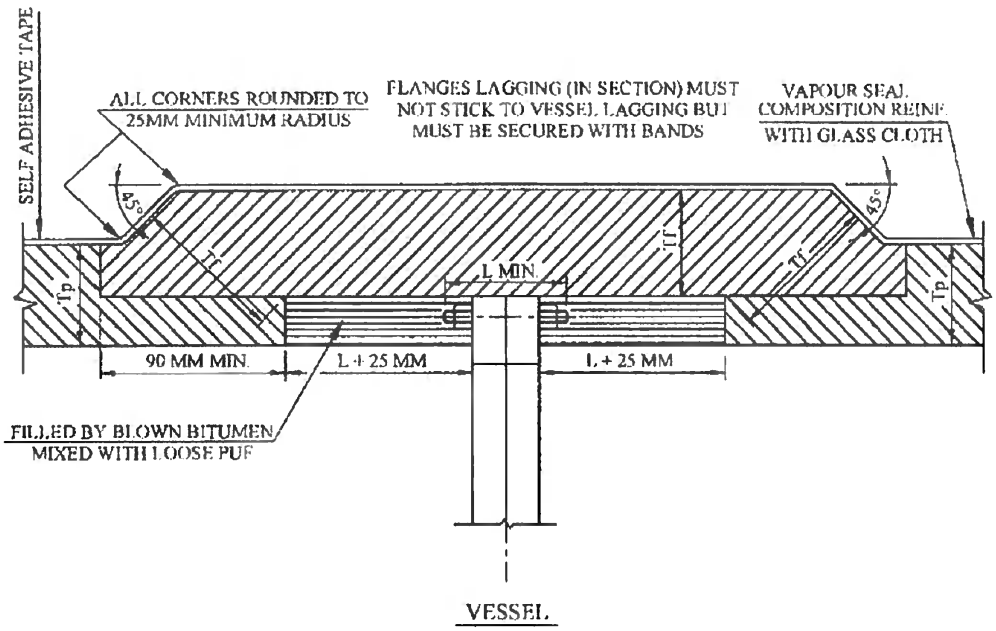

Tp = THICKNESS OF LAGGING ON PIPE OR VESSEL SHELL PLATE AND END PLATE

Tf = THICKNESS OF LAGGING ON PIPE FLANGE OR VESSEL FLANGE

Tf = Tp - 25 MM WHERE Tp>= 125 MM

Tf = 100 MM WHERE Tp IS BETWEEN 100 & 125 MM

Tf = Tp WHERE Tp <=100 MM

DRAWING NO.-14.2

METHOD OF LAGGING FLANGED JOINTS OF VESSEL

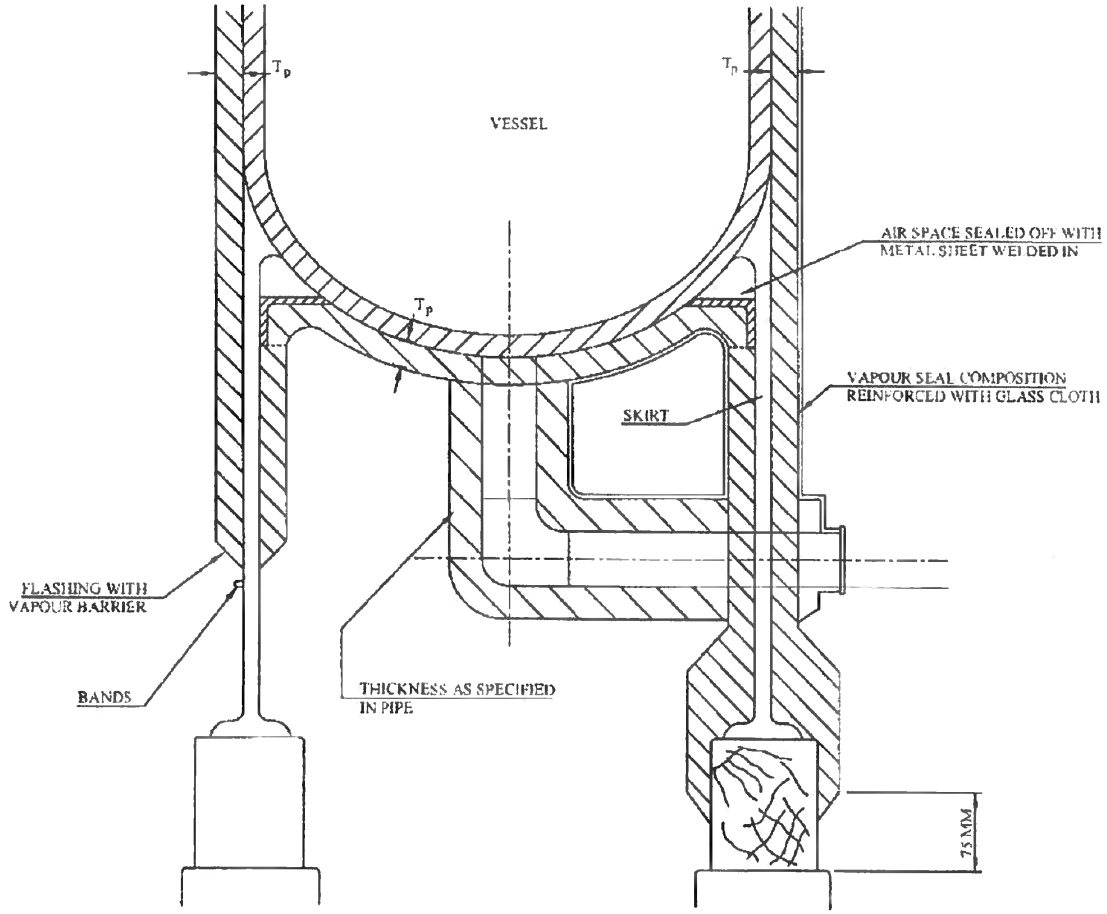

WOOD BLOCKS TO BE COATED ALL OVER WITH ADHESIVE BEFORE ASSEMBLY

T_p = THICKNESS OF VESSEL INSULATION

NOTE : ALL CORNERS MUST BE ROUNDED MINIMUM RADIUS 25 MM

METHOD OF INSULATING VESSEL SKIRT

(ALTERNATIVE FOR HALF OR FULL INSULATION OF SKIRT)

DRAWING NO.-15

ANNEXURE – VIII

Undertaking Regarding Blacklisting

(to be submitted in the bidders Letter head)

With reference to NIT No._____ dt. _____ of Ramagundam Fertilizers and Chemicals Limited, Ramagundam for at RFCL Ramagundam site I/We _____ S/o. Shri _____ R/o _____ Authorized Representative of (the institution) _____ do hereby affirm and declare as under:

i. That our Institution/sister concern etc. has not been blacklisted or put on holiday by Any Institutional Agency/Government Department/Public Sector Undertaking.
ii. That no other Institution/Sister Concern/Associates belongs to the same group are participating/submitting the Tender for the job.
iii. That the information furnished by me/us in respect of above Tender is true and correct and nothing has been concealed. In case of any information is found to be false and incorrect at any stage, RFCL shall be fully competent to take the necessary action deemed fit.

Certified that the contents of the above paras are true and correct to the best of my knowledge and belief and nothing has been concealed therein. Verified at _____ on this _____ day of ____ 2023.

Seal & Signature of the Bidder

Bidder's Initial & Seal

Annexure-IX

SECURITY DEPOSIT-CUM-PERFORMANCE BANK GUARANTEE FORMAT

(To be prepared on Stamp paper of Rs.500 issued in the name of Bank)

This BANK GUARANTEE No. _____ made this day of_____ between_____ a bank incorporated and having its registered office at_____ (hereinafter called BANK) which expression shall unless repugnant to the context or contrary to the meaning thereof include its successors and assigns on the one part and RAMAGUNDAM FERTILIZERS AND CHEMICALS LIMITED a Company registered in India under Companies Act, 2013 and having its registered office at Ramagundam Fertilizers and Chemicals Limited (RFCL), Scope Complex, 7 Institutional Area, Lodhi Road, New Delhi - 110003 India to the context or contrary to the meaning thereof include its successors and assigns on the other part.

WHEREAS in pursuance to the agreement dated _____(hereinafter called CONTRACT) entered into between RAMAGUNDAM FERTILIZERS AND CHEMICALS LIMITED (hereinafter called OWNER and _____ a Company incorporated in _____ (hereinafter called CONTRACTOR) which expression shall unless repugnant to the context or contrary to the meaning thereof include its successors and assigns, for supply of _____ as envisaged in the Contract, Contractor has to submit a Security Deposit-cum-Performance Bank Guarantee for Rs._____.

CONTRACTOR accordingly agrees to furnish the Security cum performance Bank Guarantee as hereinafter contained towards fulfilment of all of its obligations under the contract.

NOW THIS DEED WITNESSES AS FOLLOWS:

The decision of the Owner as to whether the terms and conditions of this Security Deposit-cum-Performance Bank Guarantee have been observed or not shall be final and binding on the BANK. In any case, however the Bank's responsibility under this Security Deposit-cum-Performance Bank Guarantee is limited to Rs. _____.

1. In pursuance of the Contract, the Bank hereby guarantees as a direct responsibility to OWNER that the BANK is holding the amount of Rs._____at Owner's disposal and hereby promises and shall be bound to pay to OWNER, forthwith at Owner's written notice stating that the contractor has failed to fulfil its obligations under the contract for reasons for which contractor is liable and without any protest or demur and without recourse to contractor and without asking for any reasons as to whether the amount if lawfully asked for by Owner or not, the entire amount or the portion thereof as mentioned by Owner in the notice.
2. This Security Deposit-cum-Performance Bank Guarantee shall be valid for an initial period of `_____ months from the date of this Bank Guarantee No. _____ dated _____ given by the Bank to Owner become effective. Upon expiry of ____ months from the issuance of Commissioning / erection / completion certificate according to terms of contract the Security Deposit-cum-Performance Bank Guarantee shall become null and void.
3. This Security Deposit-cum-Performance Bank Guarantee shall be in addition to and shall not affect or be affected by any other security now or hereafter held by Owner on account of money hereby intended to secure and Owner at its discretion and without any further consent from the Bank, and without affecting its rights against the Bank, may compound with, give time or other indulgence to or make any

Bidder's Initial & Seal

other arrangement with Contractor and nothing done or omitted to be done by Owner in pursuance of any authority or permission contained in this guarantee, shall effect discharge of the liability of the Bank.

4. UNLESS PREVIOUSLY CANCELLED BY THE OWNER, this Security Deposit-cum-Performance Bank Guarantee will remain in force initially up to _____ months from the effective date of Bank Guarantee No._____dated _____ given by the Bank to the Owner and subject to provisions of paragraph 2 above will stand automatically cancelled on the expiry of the said period. Unless demand or claim under this Bank Guarantee is made on Bank in writing within three months from the date of expiry of this Bank Guarantee, all the rights of Owner against the Bank shall be forfeited, and Bank shall be relieved and discharged from all the liabilities hereunder.
5. Any notice by way of request, demand or otherwise hereunder may be sent by post to the Bank, addressed as aforesaid, and if sent by post, it shall be deemed to have been given at the time when it would be delivered in due course of post, and in proving such notice, when given by post, it shall be sufficient to prove that the envelope containing the notice was posted and a certificate, signed by an officer of the owners, to the effect that the envelope was so posted, shall be conclusive.
6. The Security Deposit-cum-Performance Bank Guarantee is to be returned to the Bank after its expiry in terms of Paragraph 4 above.
7. The Bank declares that it has the power to issue this guarantee and the undersigned have full power to do so.
8. The last date of claim under this Security Deposit-cum-Performance Bank Guarantee shall be _____ (date of expiry + 3 months).

Dated _____ this _____day of _____2023

(Indicate the Name of the Bank with stamp)

Annexure-X

Performa for Indemnity Bond

(To be prepared on Stamp paper of Rs.500)

This DEED OF INDEMNITY made between M/s ....having its registered office at .....and place of business at..... (hereinafter called `The Contractor`), which expression shall include its successor and assigns of the one part and M/s RAMAGUNDAM FERTILIZERS AND CHEMICALS LIMITED , a company incorporated under the Indian Companies Act, 2013 and having its registered Office at Ramagundam Fertilizers and Chemicals Limited (RFCL), Scope Complex, 7 Institutional Area, Lodhi Road, New Delhi - 110003 India, India (hereinunder called 'the Owner') which expression shall include its successors and assigns of the other part

WHEREAS the Owner has placed a Work Order No. .....on the Contractor for ....and whereas one of the conditions of the said Contract, is that the Owner will supply to the contractor free issue Material for..... As specified in the said Contract for the purpose of .....

.....and WHEREAS the Owner has agreed to send the said Free issue Material in the terms of the said Contract upon the terms that the Contractor should enter into covenants hereinafter contained.

NOWTHIS DEED WITNESSETH AS FOLLOWS

In pursuance of the said agreement and in consideration of the promises the Contractor hereby permits and acknowledges that the Contractor holds and shall always hold the said Free Issue Materials (which will from time to time be sent by the Owner to the Contractor) under the said contract, in trust for to the order of and on account of the Owner.

The Contractor hereby assumes full responsibilities for the said Free Issue Materials shall keep the said Free Issue Materials free of charge to the Owner in the safe place and in good condition.

The Contractor hereby agrees to indemnify and keep the Owner indemnified at all times hereafter against all claims, demands, proceedings, losses, damages, costs charges and expenses which may be or brought against the owner of which the Owner may suffer or incur by reason of any loss or damage to the Contractor or its employees caused by the default or negligence of the Contractor or its employees or agent and/or by reasons of breach by the Contractor or its covenants obtained in clause 1 and/or clause 2 hereof.

The Contractor agrees that the FIM shall be used only for purpose intended by the Owner.

NOTWITHSTANDING anything stated herein above, Contractor's liabilities under this Guarantee is restricted to Rs..... (Rs..... only) and it will remain in force till.....unless an action to enforce claim under the guarantee is filed against Contractor before the aforesaid date all Owner's rights under the said guarantee shall be forfeited and Contractor shall be relieved and discharged from all the liabilities thereunder.

Dated:

Bidder's Initial & Seal

FORM OF CONTRACT

(On non-judicial stamp paper of Rs. 200)

THIS CONTRACT made at RAMAGUNDAM (Telangana) on the -------- day of ---------- BETWEEN RAMAGUNDAM FERTILIZERS AND CHEMICALS LIMITED, registered in India under the Indian Companies Act 2013, having its registered office at Ramagundam Fertilizers and Chemicals Limited (RFCL), Scope Complex, 7 Institutional Area, Lodhi Road, New Delhi - 110003 India (hereinafter referred to as the "Owner" which expression shall include its successors and assigns) of the ONE PART

AND

---------- carrying on business in sole proprietor/partnership/company etc. under the name and style of ----------, having its office at ---------- ---------- (hereinafter referred to as the "Contractor" which expression shall include his/their executors, representatives and permitted assigns/ successors) of the OTHER PART.

WHEREAS the owner is desirous of executing certain works more specifically mentioned and described in the Work Order No. ----------Dated --------- for and WHEREAS the contractor has agreed to execute the work as specified in the Tender Documents/ Work Order referred to above.

NOW, THEREFORE, THIS CONTRACT WITNESSETH AS FOLLOWS:

ARTICLE-I

1.1 CONTRACT DOCUMENTS:

The following documents shall constitute the contract documents, namely:

a) This agreement of contract;

b) NIT/Tender documents;

c) Acceptance of Tender;

d) Letter of Intent dated ----------;

e) Work Order dated ---------; and

f) Further amendments, if any.

A copy of each tender document is annexed hereto and the said copies have been collectively marked Annexure-I.

ARTICLE-2

2.1 WORK TO BE PERFORMED

In consideration of the payments to be made to the contractor as hereinafter provided, he shall, with due care, promptness, accuracy execute the work in accordance with the Notice Inviting Tenders, Special Terms & conditions of Contract, Work Order and Letter of Intent.

ARTICLE-3

3.1 COMPLETION PERIOD

The contract work shall be duly completed in all respect and handed over to . within stipulated time schedule from the date of issue of Letter of Intent. The time mentioned herein shall be the essence of the contract.

ARTICLE-4

4.1 JURISDICTION

Notwithstanding any other Court or Courts having jurisdiction to decide the question(s) forming subject matter of a suit, any and all actions and proceedings arising out of or relating to the contract (including any arbitration in terms thereof) shall lie only in the court of a competent civil jurisdiction in this behalf at peddapalli district of Telangana (where this contract has been signed on behalf of the owner) and only the said Court(s) shall have jurisdiction to entertain and try such action(s) and/or proceeding(s) to the exclusion of all other courts.

ARTICLE-5

5.1 ENTIRE CONTRACT

The contract documents mentioned in Article-1 hereof embody the entire contract between the parties. The parties declare that in entering into this contract they do not rely upon any previous representation whether expressed or implied and whether written or oral, or any inducement, understanding or agreement and all prior negotiations, representations, contract and/or agreements and understanding are hereby cancelled.

ARTICLE-6

6.1 NOTICE

Subject to any provisions in the contract documents to the contrary, any notice or order or communications sought to be served by the contractor on the owner with reference to the contract shall be deemed to have been sufficiently served upon the owner (notwithstanding any enabling provisions under any law to the contrary) only if delivered by hand or by Registered acknowledgement due post to the engineer-in-charge as defined in the general conditions of contract.

Without prejudice to any other mode of service provided for in the contract documents or otherwise available to the owner any notice, order or other communications sought to be served by the owner on the contractor with reference to the contract, shall be deemed to have been sufficiently served if delivered by hand or through registered acknowledgement due to the principal office of the contractor at his/their address mentioned on page No.1.

ARTICLE-7

7.1 WAIVER

No failure or delay by the owner in enforcing any right or remedy in terms of the contract or any obligations or liability of the contractor in terms thereof shall be deemed to be a waiver of such right, remedy, obligation or liability as the case may be, by the owner and notwithstanding such failure or delay, the owner shall be entitled at any time to enforce such right, remedy, obligations or liability, as the case may be.

ARTICLE-8

8.1 NON-ASSIGNABILITY

The contract and benefits and obligations thereof shall be strictly personal to the contractor and shall not on any account be assignable or transferable by the contractor.

ARTICLE-9

9.1 DISPUTE RESOLUTION CLAUSE

Except where otherwise provided in the contract all matters, questions, disputes or differences (Dispute/s) whatsoever, which shall at any time arise between/among the parties hereto, touching the construction, meaning, operation or effect of the contract, or out of' the matters relating to the contract or breach thereof, or the respective rights or, liabilities of the parties, whether during or after completion of works or whether before or after termination shall after written notice by either party to the contract shall be resolved / settled amicably through negotiation by the parties. For the same, one party shall issue dispute notice in this regard, to the other party. If the said dispute/s could not be settled amicably within 45 days

from the date of receipt of dispute notice by other party, then, party/ies may refer the said dispute/s for adjudication through Arbitration, as prescribed hereinafter.

On failure of amicable resolution/settlement as above, The dispute/s shall be referred / adjudicated through Arbitration under / in accordance with "Arbitration Centre (Domestic and International), High Court of Judicature at Hyderabad for the state of Telangana and the State of Andhra Pradesh Rules,2015" as amended or modified or re-enacted from time to time. Where the said rules are silent or in conflicts with Indian Laws, same shall be governed by Arbitration & Conciliation Act 1996, as amended or modified or re-enacted, from time to time.

The number of Arbitrator shall be three (3) in case of matter involving total amount of claims (without considering claim of interest) more than Rs. 3 Crore, otherwise number or Arbitrator shall be one (1) i.e. (Sole) Arbitrator.

The language of Arbitration shall be English.

The Governing Law Shall be Laws of India and dispute/s shall be adjudicated as per Indian Laws.

For the convenience of parties, the venue of Arbitration shall be as per above rules i.e. Arbitration Centre, Hyderabad, However, The Seat of the Arbitration Shall be, Ramagundam, Peddapalli District, State of Telangana. The courts at Ramagundam Peddapalli District, State of Telangana shall have exclusive Jurisdiction.

It is also agreed by and between the parties that in case a reference is made to the Sole Arbitrator / Arbitral Tribunal for the purpose of resolving the dispute/s arising out of the contract by and between the parties hereto, the Arbitrator or the Arbitral Tribunal shall not award interest on the awarded amount more than the SBI MCLR Rate applicable to RFCL on the date of award of contract.

IN WITNESS WHEREOF the parties hereto executed this contract on.....the day of ....., 20__ and shall come into force w.e.f.....

SIGNED AND DELIVERED FOR AND ON BEHALF OF

Ramagundam Fertilizers and Chemicals Limited (With Rubber stamp)	Contractor (With Rubber stamp)
Witness	Witness
1.	1.
2.	2.

Bidder's Initial & Seal

(Undertaking for Statutory obligations to be given in the letter head along with every Running Bill)

Certificate of Compliance

Of

Statutory Provisions of Labour Laws

Certified that provisions of contract Labour (Regulations and Abolition Act-1970) and other relevant Laws as mentioned below have been complied with towards the contract for _____ awarded to M/s. _____having work order No_____dated_____ for which RA Bill No_____ has already been submitted for Rs._____ against which payment has been made through Electronic Fund Transfer to the bank accounts of the employees and is as per Minimum wages act, bonus and other laws and no complaint has been lodged till date by any contract employee of the above contractor, who has paid wages and applicable statutory payments on account of EPF, ESI, Bonus, Leave Payment for the month of _____.

Maintained proper registers, records, documents and books and filed proper returns, forms and statement and furnished necessary particulars to the relevant authorities. EPF and ESI Contributions for the above referred month have been deposited with concerned authorities on or before due dates in respect of the manpower deployed as mentioned in Sl. No _____ to _____ of wage payment register.

1. Minimum Wages Act 1970, Factories Act-1948 &2013, Workman Compensation Act 1923.
2. Employee's Provident Fund & Miscellaneous Provision Act 1952
3. The Payment of Bonus Act – 1965
4. Any other Labour Law formed by State/ Central Government from time to time and relevant to the above contract.

WE have gone through the terms and conditions stipulate in the tender document and confirm to abide by the same and not done or committed any act or entered into any transaction in violation of any statutory provisions. No other charges would be payable by RFCL.

(Signature & Seal of Authorized signatory
of the Agency/Contractor with seal)

Signature & Seal of
Authorised Signatory
of the Executing Department)

Verified by
Authorised Signatory
(Signature & Seal of
HR Department, RFCL)

Check Sheet for bidder

Annexure XIII

Ref: RFCL/Site/Mech/2023/09/ARC_Insulation

Technical Check list for "Annual Rate Contract for Hot and Cold Insulation Jobs at RFCL Ramagundam for a period of One year."

S.N	Description	RFCL Requirement as per NIT	Vendors Comment (Agreed/ Not Agreed or Yes/No, please comment/reason if answer is not agreed or No
1	Scope of work as per Annexure V and SOR (Annexure XV)	Acceptance	
2	GTCC as per Annexure IV	Acceptance	
3	Integrity Pact	Acceptance	NA
4	Terms and conditions of NIT including Scope of work	Acceptance	
5	Uploading of Unpriced bid along with Technical Bid	Required	
6	GST if applicable shall be paid by RFCL against GST Invoice. It may further be noted that prime responsibility for assessment in respect of GST rests with the contractor. Therefore liability of RFCL is restricted to the extent of GST only i.e. excluding interest or penalty if any. It must therefore be ensured by the contractor himself that GST is deposited with appropriate authority in time & manner as prescribed by the law.	Acceptance	
7	Income Tax & other Taxes on Contracts shall be paid by Contractor	Acceptance	
8	Minimum offer validity of 120 days	Acceptance	
9	Whether registered as Micro/Small / Medium Enterprises under MSMED Act 2006 promulgated by Govt. of India Vide Notification dated 16.06.2006,	Yes or No	
	It may also be confirmed that if the MSEs owned by SC/ST/Women Entrepreneurs.	Yes or No	
10	The venue of arbitration proceedings shall be at RFCL, Ramagundam, Peddapally Dist. Telangana	Acceptance	
11	Jurisdiction of the Courts at Peddapally Dist. Telangana	Acceptance	
12	The schedule of quoted rates shall remain firm during the contract period including extension (if any).	Acceptance	
13	Payment of Monthly RA Bills shall be released through Electronic Fund Transfer (EFT) mode.	Acceptance	
14	No Deviation to the Terms & Conditions of NIT is allowed. The offer with any condition / deviation is liable to be rejected at Sole option of RFCL. However Vendor may offer comments, if any.	No deviation is accepted	
15	Upload scanned image of NIT documents duly signed by the authorized signatory towards acceptance of all T&C of NIT.	Yes or No	

Bidder's Initial & Seal

Annexure-XIV

Undertaking on Bidder's Letter Head

(to be submitted in the bidders Letter head)

With reference to NIT No._____ dt. _____ of Ramagundam Fertilizers and Chemicals Limited, Ramagundam for at RFCL Ramagundam site I/We _____ S/o. Shri _____ R/o _____ Authorized Representative of (the institution) _____ do hereby undertake the following:

i. I/We have read all the terms & conditions of the tender document and the Scope of work of the contract and understood completely.
ii. I/We have quoted the service charges and profit margin for Part A, after considering all the spares, gas, consumables that will required for the execution of the said contract, all other overhead expenses and the statutory deduction.
iii. I/We have quoted the service charges and profit margin for Part B.1 and Part B.2, considering all overheads and the statutory deduction.

We also undertake that, if any such discrepancies found in our price bid, our bid shall be treated as non-responsive shall be rejected.

Signature of the Tenderer with stamp

Name_____

Bidder's Initial & Seal

SOR : ARC Hot and cold insulation work at RFCL, Ramagundam-505210 for a period of One year

Part: A	**Supply and fixing of hot insulation (excluding cladding sheet application)** Supply and fixing of Hot insulation with all insulating & ancillary materials, foils, weather protective covering (vapour barrier) , Consumables ,Cleaning of surface, Cleaning of surface, surface preparation (use of paint & primer) testing of material as required. Contractor carry out Hot insulation on pumps, turbines, tanks, heat exchangers, vessels, boilers, pipe lines, bends, tees, valves, flanges, domes, manhole covers, flat surfaces, etc. at all heights including transportation to work site, scaffolding charges including labour, PPE,s, tools, tackles, supervision and completion of work in all respects as per drawing, specifications, standards and instructions of Engineer-in-Charge & according to given in NIT. Note: 1) Rockwool- Pipe section of Bulk density- 142.56kg/m³ to 149.93 kg/m³ for up to 8" dia pipe line , LRB mattress of Bulk density- 128 kg/m³ for above 8" dia. pipe line and LRB mattress of Bulk density- 128 kg/m³ for EQUIPMENTS. or use insulation wool as per standard given in NIT 2) HOT INSULATION STANDAERD: IS:9842/ASTM C547 TYPE II &III OR IS:8183/ASTM C592 CLASS II.

Sr.no	DESCRIPTION	UOM	SOR QTY	RATE (INR) PER M²		Estimated AMOUNT (RS)	
				In figure	In Words	In figure	In Words
(i)	(ii)	(iii)	(iv)	(v)		(vi) = (iv) x (v)	
1. Supply and fixing- LRB MATTRESS/Pipe Section UPTO-8" NB PIPES							
1. 1	Hot insulation thickness -25 mm for pipes up to 8"NB	M²	50				
1. 2	Hot insulation thickness -40 mm for pipes up to 8"NB	M²	50				
1. 3	Hot insulation thickness -50 mm for pipes up to 8"NB	M²	350				
1. 4	Hot insulation thickness -75 mm for pipes up to 8"NB	M²	350				
1. 5	Hot insulation thickness -100 mm for pipes up to 8"NB	M²	25				
2. Supply and fixing- LRB MATTRESS/Pipe Section above -8" NB PIPES							
2. 1	Hot insulation thickness -50 mm for pipes up to 8"NB	M²	450				
2. 2	Hot insulation thickness -75 mm for pipes up to 8"NB	M²	350				
3. Supply and fixing- LRB MATTRESS FOR HOT INSULATION ON EQUIPMENTS							
3. 1	Hot insulation thickness -40 mm	M²	40				
3. 2	Hot insulation thickness -50 mm	M²	100				
3. 3	Hot insulation thickness -75 mm	M²	150				
3. 4	Hot insulation thickness -100 mm	M²	40				
Total (Part-A)					**In figure**		
In words :							

Bidder's Initial & Seal

Part:B	**Supply and fixing of COLD INSULATION (excluding cladding sheet application)** Supply and fixing of cold insulation (excluding aluminium sheet) with all insulating & ancillary materials, foils, weather protective covering(vapour barrier) , Consumables ,Cleaning of surface, surface preparation (use of paint & primer), testing of material as required. Contractor carries out cold insulation on pumps, turbines, tanks, heat exchangers, vessels, boilers, pipe lines, bends, tees, valves, flanges, domes, manhole covers, flat surfaces, etc. at all heights including transportation to work site, scaffolding charges including labour, PPE's, tools, tackles, supervision and completion of work in all respects as per drawing, specifications, standards and instructions of Engineer-in-Charge & according to given in NIT. (ASTM C-795) Note: Insulation material - Rigid polyurethane Foam (PUF) of density 36kg/m³ of PUF pipe section or as per standard given in NIT.						
Sr.no	**DESCRIPTION**	**UOM**	**SOR QTY**	**RATE (INR) PER M²**		**Estimated AMOUNT (RS)**	
				In figure	**In Words**	**In figure**	**In Words**
(i)	**(ii)**	**(iii)**	**(iv)**	**(v)**		**(vi) = (iv) x (v)**	
1. Supply and fixing- Rigid polyurethane Foam (PUF) cold insulation Pipe Section UPTO-8" NB PIPES							
1. 1	Cold insulation thickness -40 mm for pipes up to 8"NB	M²	20				
1. 2	Cold insulation thickness -50 mm for pipes up to 8"NB	M²	20				
1. 3	Cold insulation thickness -75 mm for pipes up to 8"NB	M²	20				
1. 4	Cold insulation thickness -100 mm for pipes up to 8"NB	M²	20				
1. 5	Cold insulation thickness -160 mm for pipes up to 8"NB	M²	20				
1. 6	Cold insulation thickness -200 mm for pipes up to 8"NB	M²	20				
2. Supply and fixing- Rigid polyurethane Foam (PUF) cold insulation Pipe Section above-8" NB PIPES							
2. 1	Cold insulation thickness -50 mm for pipes up to 8"NB	M²	20				
2. 2	Cold insulation thickness -75 mm for pipes up to 8"NB	M²	20				
2. 3	Cold insulation thickness -100 mm for pipes up to 8"NB	M²	20				
2. 4	Cold insulation thickness -160 mm for pipes up to 8"NB	M²	20				
2. 5	Cold insulation thickness -200 mm for pipes up to 8"NB	M²	20				
3. Supply and fixing- Rigid polyurethane Foam (PUF) cold insulation ON EQUIPMENTS							
3. 1	Cold insulation thickness -40 mm	M²	20				
3. 2	Cold insulation thickness -50 mm	M²	20				
3. 3	Cold insulation thickness -75 mm	M²	20				
3. 4	Cold insulation thickness -100 mm	M²	20				
3. 5	Cold insulation thickness -150 mm	M²	20				
3. 6	Cold insulation thickness - 200 mm	M²	20				
Total (Part-B)					**In figure**		
In words :							

Bidder's Initial & Seal

Part:C	**MISCELLANEOUS** Contractor carries out below mentioned works on pumps, turbines, tanks, heat exchangers, vessels, boilers, pipe lines, bends, tees, valves, flanges, domes, manhole covers, flat surfaces, etc. at all heights including transportation to work site, scaffolding charges including labour, PPE's, tools, tackles, supervision and completion of work in all respects as per drawing, specifications, standards and instructions of Engineer-in-Charge & according to given in NIT.

Sr.no	DESCRIPTION	UOM	SOR QTY	Per unit rate(RS)		Estimated AMOUNT (RS)	
				In figure	In Words	In figure	In Words
(i)	(ii)	(iii)	(iv)	(v)		(vi) = (iv) x (v)	
3. 1	Application of new 22 SWG Aluminium sheet to be supplied and fix by the contractor with joint sealer and bond at all heights. Sheet as per ASTM B209 Alloy 3003 H16 or IS:737 designation 31000 condition H3	M^2	1250				
3. 2	Application of new 22 SWG Corrugated sheeting to be supplied and fix by the contractor with joint sealer and bond at all heights Sheet as per ASTM B209 Alloy 3003 H16 or IS:737 designation 31500/51300 condition H4	M^2	100				
3. 3	Application of RFCL supplied old cladding sheet to be fix by the contractor with joint sealer and bond at all heights	M^2	500				
3. 4	Removal of old hot insulation wool mattress with cladding sheet of any thickness	M^2	1500				
3. 5	Removal of old cold insulation with cladding sheet of any thickness	M^2	300				
3. 6	Cutting/opening/fixing of inspection pocket (6" x 6" to 10" x 10" square or 4" to 10" dia round)	Nos.	100				
3. 7	Supply and application of Hot wrapping and coating material (Epoxy and Butimin Sheet) along with adhesive (mostly for underground pipe line)	M^2	100				
3. 8	Supply and application of high temperature insulation material (Ceramic fiber - equivalent ASTM C892 TYPE III grade A) Bulk density 128 Kg/M3	M^2	20				
Total (Part-C)					**In figure**		
In words :							

Bidder's Initial & Seal

Total Quoted Price

SOR Part	*In Figure (₹)*	*In Words (Rs.)*
Part-A		Rupees .....
Part-B		Rupees .....
Part-C		Rupees .....
Total		**Rupees** .....

Note:

1) GST extra as applicable.

2) Tool tackles, PPE's and Safety harness in bidder scope (Charges inclusive in quoted rates)

3) Scaffolding material, lifting & shifting , scaffolding erection & dismantling for insulation in bidder scope (Charges inclusive in quoted rates)

4) Sound and experienced supervisor in bidder scope on free of cost basis.

5) For SOR Part -A,B & C (except item No. - 3.3) : All material required for work execution in bidder scope (Charges inclusive in quoted rates)

6) For SOR Part -C item No. - 3.3 : All material requires for work execution in bidder scope (Charges inclusive in quoted rates) except cladding sheet.

7) For SOR Part -A,B &C : Manpower for works execution in bidder scope (Charges inclusive in quoted rates)

Bidder's Initial & Seal